THE COMPLETE GUIDE TO SAVING ENERGY IN THE HOME

The Complete Guide to Saving Energy in the Home

Everyday Step to Lo er Your Energy Bills

The Complete Guide to Saving Energy in the Home

Everyday Step to Lower Your Energy Bills

Home Energy Savings Checklist

Living in a home, whether you own it or rent it, requires a financial commitment. That commitment includes the bills you pay every month for the energy your home consumes. You pay to power your home with electricity. You pay to heat and cool it. All of those things add up.

Making your home energy efficient can go a long way toward lowering those bills, but it's not something you can do in one day. It's a series of changes—some small, some large—that you make over time to increase your home's efficiency.

An efficient home is one that uses the energy you pay for with as little waste as possible. This means the money you spend to run your home stays in your home and does not leak out because of poor insulation, drafty windows, or other inefficiencies.

Making your home more efficient reduces the amount of energy you use, which means paying less on your energy bills. Lower energy bills will leave you more money to invest in your home and your family.

You can start taking these steps this afternoon, this week, or this month. The most important thing is to recognize the changes you can make to create a more efficient home, and make them whenever you can.

In Every Room

today: Adjust your thermostat. Set it high in the summer, 78 degrees. It should be warm but still feel comfortable. Turn on a fan before turning on the air conditioner. In the winter, set the thermostat at 68 degrees, and reach for a sweater before turning it up. For every degree you turn down the temperature, you will save up to 5 percent in heating costs, or $45 during the winter heating season. Five degrees can save up to $225!

Turn down the water temperature. If you have an electric water heater, set it to 120 degrees. This will save you energy and prevent you from scalding hot water. If you have a gas water heater, it probably doesn't have degree settings. Instead it has a dial with three marked settings: HOT, WARM, and VACATION. Use a setting between WARM and HOT.

Unplug your second refrigerator. A second refrigerator can use a lot of energy. About 7 percent of your home's energy use goes to powering your refrigerator—and that amount is doubled if you own two. You can save up to $250 on your annual electricity costs by using just one refrigerator. Make it an Energy Star model for additional savings.

this week: Look at your lighting. Count all of the lights in your home and decide how many you can replace with compact fluorescent bulbs (CFLs). It's a small change, but it will save you between $5 and $6 per year for every 60-watt incandescent bulb you replace with a CFL.

Use the sleep features on computers and other office equipment. An average household spends up to $175 each year powering computers and other electronics, according to the Rocky Mountain Institute. Using the sleep mode can cut that amount by more than 60 percent. Also consider investing in an energy-saving power strip with auto-switching technology. It will automatically turn off power when not in use to save energy.

Buy an insulation blanket for your water heater. If your water heater has a storage tank, insulation blanket can make it more efficient. A blanket costs between $10 and $20 and reduces heat loss by 25 to 45 percent. You can install it yourself on an electric-powered water heater; gas systems are best left to a professional because blankets can cause a fire hazard if installed incorrectly.

this month: Find out if your home is leaking air—then seal it up. Your home can leak air through doors, windows, the attic, and other spaces. This means the air you pay to heat and cool is actually going outdoors. Sealing air leaks can cut your energy bill by 5 to 10 percent, according to the U.S. Department of Energy.

Purchase a programmable thermostat. You save money by turning the heat down while you are away from home during the day and while you sleep at night. Buying a programmable thermostat makes this easy because it can automatically change the heat settings, saving up to $150 every year, according to Energy Star.

Insulate pipes near your hot water heater. The hot water can cool down as it travels through the pipes in your home. Insulating these pipes reduces heat loss and raises the water temperature by 2 to 4 degrees. You should insulate all hot water pipes you can reach and all cold water pipes within 3 feet of the water heater.

this year: Tune up your heating or cooling system. Heating can account for one-third of your home's energy bill. A professional tune-up will make sure your system runs as efficiently as possible and save you money. You should also replace air filters once a month to maximize efficiency.

Look for the Energy Star label. If you need to buy a new appliance, choose one certified by Energy Star. This government program certifies energy-efficient appliances, including clothes washers, dishwashers, refrigerators, freezers, room air conditioners, and dehumidifiers. Choosing these models will lower your energy bill, because they meet stricter energy efficiency standards than other appliances.

Think about adding more insulation. It helps protect your home from heat loss and can save you up to 20 percent on your heating and cooling bill by keeping the air you pay to heat and cool inside your home.

Kitchen

today: Check the settings on your refrigerator. The temperature should be set between 36 and 38 degrees, and your freezer should be set to zero degrees. Also, make sure to use any power-saver or energy-saver features on your refrigerator.

this week: Stop hand washing your dishes. You can save 5,000 gallons of water per year and $40 in utility bills by using an Energy Star–rated dishwasher.

this month: Defrost your refrigerator. If your refrigerator is a manual defrost or partial-automatic defrost model, it needs to be defrosted regularly. If you do not, then ice will build up on the coils and make the refrigerator work harder to keep the temperature cold, wasting energy.

this year: Consider replacing an older refrigerator. Refrigerators more than 15 years old are usually a good target for replacement. Those made before 1980 cost about $150 a year more to operate than new Energy Star models.

Living Room

today: Turn off the TV when no one is watching it. This is th as way to save money on your home electronics. Remember that your TV esn ed to be on to record programs.

this week: Check your window coverings. T ey s ld keep the h t out in the summer and keep it in during the winte Close c ings on s th-, east-, and west-facing windows during the day in sum er. In w e p curta ns open during the day and close th at n g .

this month: Buy po er strips for your home e ctronics. Electronics can draw energy even whi hey are at co money. Prevent this by plugging electronics into a pow p and flipping he sw ch off when you aren't using the electronics. Don't do this with televisions hough, because many TVs need to be reprogrammed if they are completely turn off.

this year: Upgrade inefficient indows. Consider replacing them with Energy Star–rated energy-efficient windows or reinforcing them with weather-stripping and storm windows to keep the heat inside your home during the winter.

Bedroom

today: If you own a water bed, make the bed every day. Your bedspread and sheets will insulate the bed and reduce the amount of heat it uses, saving up to a third of the energy the bed uses. Heated waterbeds can cost you up to $205 per year, according to the New York State Energy Research and Development Authority.

this week: Use fans. When your home gets warm, turn on a fan before turning on the air conditioner. Fans use less energy and are very effective. If you have a ceiling fan, use it. In summer, ceiling fans make you feel about 4 degrees cooler, even though they don't lower actual temperature of the room. In winter, set the direction of the fan's blad o turn clockwise, so they pull cool air up and push heated air downward. Y can turn down your thermostat by 4 degrees and your home will still feel the s e temperat

this month: Adjust yo ep cycle. Instead of running your heater overnight in he fall or spring, add e a layers of bed g to keep you warm at night. If you can't nd getting out of bed en it's co install a timer or programmable thermostat an et it turn up your fur ce tomatically 30 to 60 minutes before g

th year: our bed m has an older room air conditioner, consider upgradin t. You can s m e than $50 on electricity by replacing a 15-year-old mod ith a new Ener Star–rated one. Make sure your machine is away from T and other electronics that produce heat, which may cause the air conditioner run longer than needed.

Bathroom

today: Reduce your hot water use. Take shorter showers. Turn the water off while you brush your teeth. Take more showers than baths.

this week: Buy low-flow showerheads. With regular showerheads, a family of four can use 700 gallons of water each week if each person takes a daily five-minute shower. Low-flow showerheads cut that water use in half—saving you both water and the energy used to heat the water.

this month: Repair leaky faucets. Even a slow drip can waste up to 450 gallons of water a month, according to the Oregon Department of Energy. If it's hot water leaking, then you are also wasting the energy used to heat that water.

this year: Think about replacing your toilet. If your home was built before 1992 and the toilets haven't been replaced, you could save 5 gallons of water per flush by installing a high-efficiency toilet.

Laundry Room

today: Run the clothes washer only when you have a full load of laundry to do. If you must wash a small load of laundry, always turn the water level to the lowest possible setting.

this week: Wash your laundry with cold water whenever possible. In older top-loading washing machines, this can save up to $63 a year, according to the Alliance to Save Energy.

this month: If it's warm, hang your laundry outside instead of using the dryer. If you must use the dryer, separate quick-drying clothes and slow-drying ones into different loads so that the machine runs only as long as it needs to.

this year: Consider replacing an old washing machine with an Energy Star–rated model, preferably a front-loading machine. They use less than 25 gallons of water for each wash cycle, compared with 40 gallons for conventional top-loading clothes washers.

Yard

today: Let your grass grow. Longer grass loses less water to evaporation. Mowing too frequently means your yard will need more water.

this week: Be smart about watering. Use a shut-off nozzle on your hose to water plants, and make sure your sprinkler isn't watering your neighbor's lawn. Don't leave hoses or sprinklers unattended: outdoor faucets can flow at more than 264 gallons per hour.

this month: Think about switching your outdoor lights to energy-efficient CFLs. Because CFLs work less efficiently in cold temperatures, make sure you buy bulbs designed for outdoor use. Also think about installing a motion sensor to make your home safer without leaving the lights on all the time.

this year: Consider planting trees that lose their leaves in the fall on the south, east, and west sides of your home. This protects your home from the summer sun and allows sunlight to warm your home in the winter once the leaves are gone.

Know Your Energy Bill

Your energy bill doesn't come with a handy receipt listing how much energy each appliance in your home uses. It takes some work to find the biggest energy guzzlers in your home—and then more work to fix them. But it helps to understand where most homes use the most energy.

More than one-third of your energy bill is spent on simply heating and cooling your home. That's more than you spend to heat water, power lights, and run all of your electronics combined. But smaller items add up too. You spend 7 percent of your total energy just running your refrigerator. Stoves, ovens, computers, and flat-screen TVs also add to the bill.

The lesson is that these costs add up, but your savings can add up, too, if you reduce your energy use in both big and small ways.

Getting Started

You can pinpoint where your home uses the most energy by performing a simple home energy audit. This book will show you how to do one. It will also give you room-by-room guidance on how to lower your energy bills.

The energy audit determines which parts of your home use the most energy; these are the areas where you should begin your efforts. You can also contact your local utility company or your state's energy office to see if they provide a low-cost or no-cost energy audit.

To reduce your energy bills, you need to understand how you pay for energy. Your home usually needs several different types of energy and you pay for each of them. You pay for electricity to power your appliances. You pay to heat your home with natural gas, heating oil, propane, or electricity. You pay another bill for your water—and that's something you can lower, too, along with your energy use.

Knowing where these different types of energy come from—and what you use them for—is the first step to saving money on each of these bills.

Electricity

Typically, your home's electricity is created in a generation power plant that burns coal or natural gas, or from nuclear power, or by hydro-generation, or in some cases is generated through renewable sources like wind and solar. Once it's produced,

the electricity is funneled into large transmission power lines that transport and step down to substations and into your neighborhood through power lines that run either underground or atop tall poles on the side of the road. This network of power lines is often referred to as the "grid."

The electricity moves from the grid into your home through your electric meter. Your electric utility uses the meter to keep track of how many kilowatt-hours of electricity you use.

A standard electric meter is like a clock, and it's powered by the electricity that moves through it. As the electricity enters your home, a small set of gears inside the meter begins to move. The number of rotations those gears make is recorded by the dials on the face of the meter. The more electricity the home is using, the faster those gears rotate. Your electric bill reflects the total amount of energy you use.

Electric Meter Reading Lesson

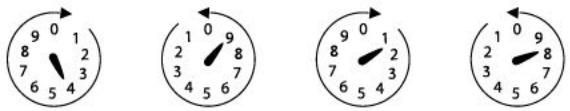

Reading: 4	Reading: 9	Reading: 1	Reading: 8
Clockwise	Counterclockwise	Clockwise	Counterclockwise

(The meter above reads 4918. According to your most recent bill, it previously read 4218.)

The Current Reading (4918) minus the Previous Reading (4218) equal 700. So, in this example, you have used 700 kilowatt-hours of power since your last electric meter reading.

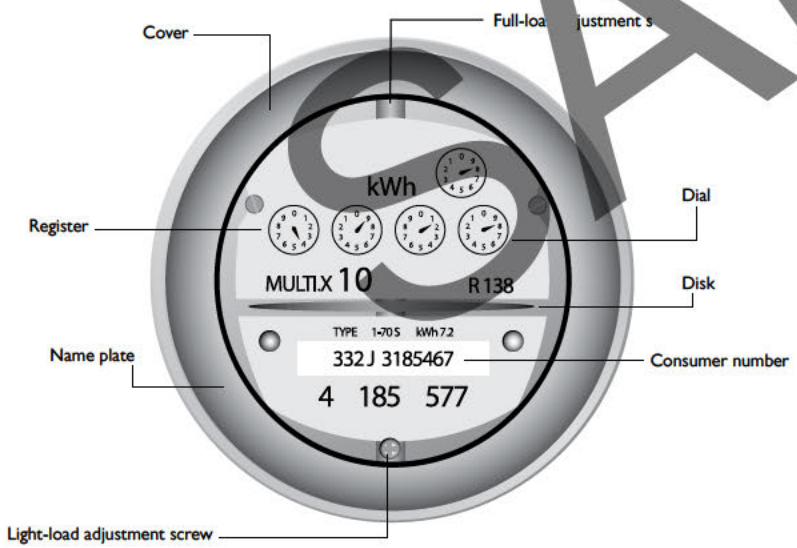

How to Read Your Electric Bill

Name: Harry Smith **Account number:** 75-5255-0952-0905-5 **Billing period ending:** Dec 04, 2008
Page 1 of 2

Your account number: 75-5255-0952-0905-5
Service delivered to: 35 Main Street
Your electric rate: Residential
Next meter reading date: Friday, Jan 3, 2009
Avoid estimate bills - please give us access to read your meter.

Balance. Your current balance is listed. Any past balances on your account are also shown.

Your billing summary as of Nov 5, 2008

Your previous charges and payments

Total charges from your last bill	**$43.33**
Payments through Nov 3, thank you	**$43.33**
Remaining balance	**None**

Your new charges - *details start on page 2*
Billing period: Nov 05, 2008 to Dec 04, 2008
Electricity charges - for 30 days **$82.69**

Billing period. This is the t frame for which y are being charged.

Total new charges **$82.69**
Total amount due **$82.69**

Payment is due upon receipt of this bill. To avoid a late payment charge of 1.5%, please pay the total amount due by **Dec 29, 2008.**

Name: Harry Smith **Account number:** 75-5255-0952-0905-5 **Billing period ending:** Dec 04, 2008
Page 2 of 2

Your electricity charges

These charges are for the electricity you used (supply) and getting th electricity to you (delivery). Rates are based on a 30-day period. When your billing period is more or less than 30 days, we prorate your bill accordingly.

Electricity you used during this 30-day billing period from Nov 05, 2008 to Dec 04, 2008
Rate: EL2 Small Non-residential **Meter#** 619244

We measure your electricity by how many kilowatt hours (kW use. One kWh will light a 100-watt bulb for 10 hours.

Dec 04, 08 actual reading	67031
Nov 05, 08 actual reading	- 66857
Your electricity use	**174 kWh**

Meter reading. The bill states your meter reading at the beginning of the billing period and at the end of the billing period. Sometimes this is based on an actual reading of your meter and sometimes it is based on an estimate. Your bill should tell you which one your charges are based on.

▶ Your electricity charges

Supply 174 kWh @ 23.7586¢/kWh **$41.34**
Charge for the electricity supplied to you by Con Edison.

Merchant function charge **$0.81**
Charge associated with procuring electricity, credit and collection related activities and uncollected accounts.

GRT & other tax surcharges **$1.01**
Taxes on Con Edison gross receipts from sales of utility services and other tax surcharges.

Total supply charges **$43.16**

Your total electricity supply cost for this bill is 24.8¢ per kWh. You can compare this price with those offered by energy services companies (ESCOs). For a list of ESCOs, visit www.PowerYourWay.com or call 1-800-780-2884.

Total kilowatt-hours used. This is the most important number to look for, because your electric company charges you based on how much electricity you actually use. You can easily reduce this number by making changes today.

▶ Your delivery charges

Basic service charge **$16.02**
Charge for basic system infrastructure and customer related services, customer accounting, meter reading and meter maintenance. A billing and payment processing charge of $0.94, *which may be avoided by switching to an energy service company (ESCO)*, is also included.

Delivery 174 KWh @ 9.1437¢/kWh **$15.91**
Charge for maintaining the system through Con Edison.

Service and delivery charges also are listed, along with any taxes that apply in your area.

Natural Gas

Natural gas is harvested from wells that are drilled deep into the earth. The gas flows through the well and into a large pipeline that takes it to businesses and homes, where it is used for heating.

On the way, a foul-smelling chemical is added to the gas to make it smell like rotten eggs. Because natural gas is normally odorless, the chemical helps people know when there's a gas leak. If you smell this odor in your home, contact the fire department or your utility company immediately.

The amount of natural gas you use is measured in two ways, either in British thermal units (written as Btu) or in cubic feet (CCF). The price you pay for each Btu or cubic foot of gas will depend on the amount of gas being produced and on the severity of the winter weather. In cold weather, there is more demand for natural gas, which usually raises the price.

Heating Oil

Fewer than 10 percent of homes in the United States use heating oil as their main source of heating fuel. Most of them are in the Northeast, where older home were built to rely on heating oil. In other regions, older homes have largely been converted from heating oil to natural gas heat.

Heating oil is produced by oil refineries, usually on a seasonal schedu efineries only make heating oil when they are making other products, and they pica don't produce much heating oil in the winter. This can affect the price you pa or it.

Heating oil is delivered directly by tanker truck and s red a large tank, u ally in your basement. But few homes have tanks large enoug to hold of the oil n ded for the entire winter, and many need to be refilled a many as r five t s during the winter. Prices go up duri inter becaus the mand fo ting oil is highest in that season. In the N rtheast, homes can use verage of 660 gallons of heating oil during the winter, b t very little the rest of the ar.

To buy heating oil, you need t cal heatin oil co pany. The best place to start this search is in your phone book. Spend on or two hours before the start of heating season calling companies in your area ices and service can vary a lot among companies. Spending time c paring r options may have a large payoff. The price of heating oil can vary by as uch as $1 per gallon between different companies. Because a tank typically holds up to 250 gallons of oil and needs to be refilled more than once each winter, your savings can add up quickly.

When you sign a contract with a heating oil company, they usually will come to your home on a regular schedule so you don't run out of oil. But make sure to check the tank periodically, just to be safe.

How to Read Your Natural Gas Bill

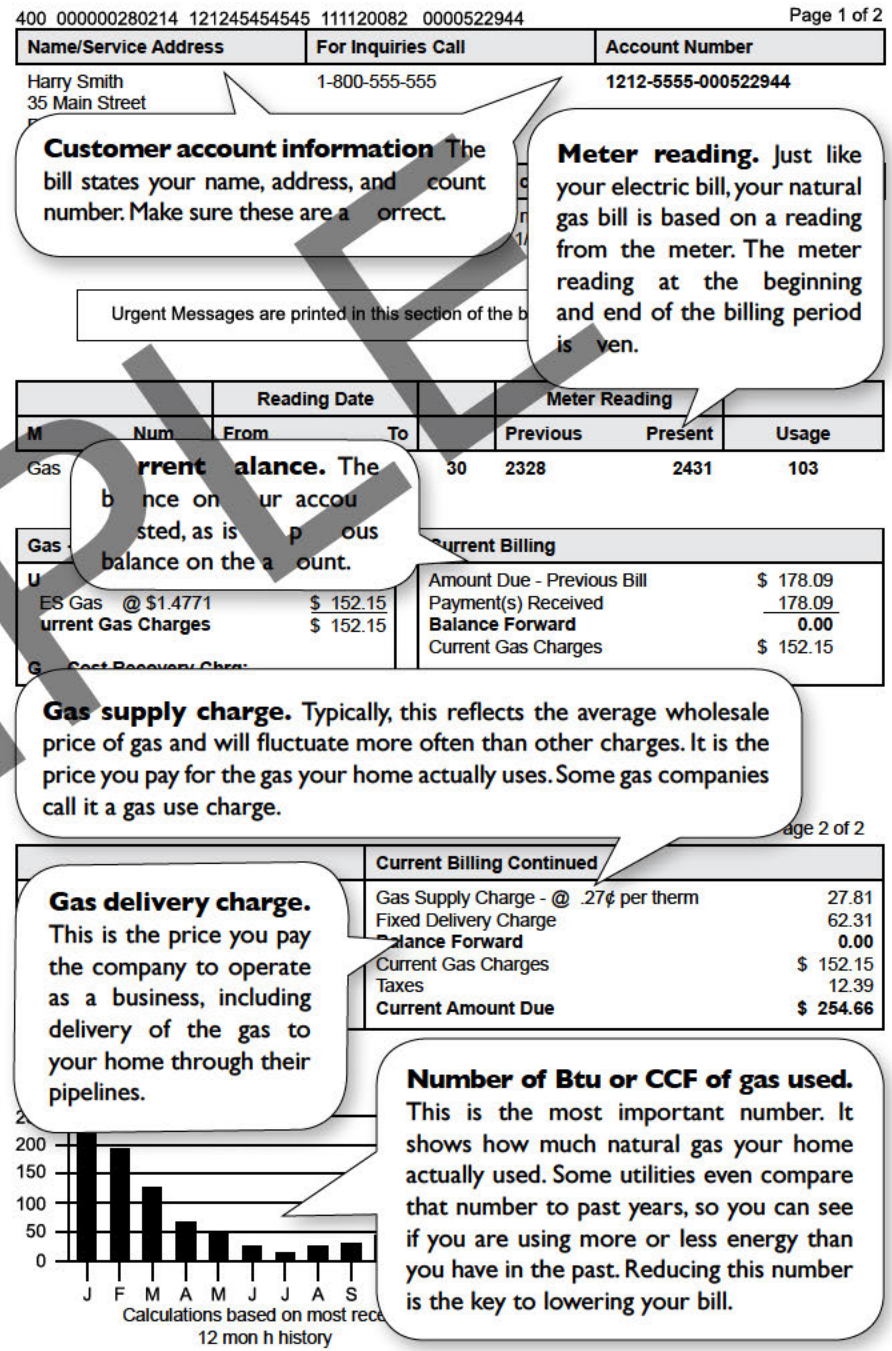

When you compare companies, the first thing to ask each one is what price they charge per gallon for their heating oil. Then ask whether they offer capped or fixed rates, which can protect you from increases in the price of heating oil during the winter.

You should also ask:

- *What is the cost of a service contract with their company? Is that cost included in the price? If not, how much extra is it?*
- *How long is the contract term?*
- *Can the contract be broken? If so, is there a penalty?*
- *What type of service do they offer? This becomes more important as your furnace gets older. If it is 10 or 15 years old, you might want a company that offers 24-hour repair service.*

Propane

While not as well known as other home heating fuels, propane is a versatile way to heat homes, heat water, cook, dry clothes, and fuel gas fireplaces.

Propane heating is most common in rural areas. If your home uses propane, the price you pay for it depends on several factors. Because propane does many things—from powering barbecue grills to producing petrochemicals—the price you pay depends in part on the price propane reaches in these other markets. The p[illegible] also higher if it has to travel a long distance to reach your home.

Re-Lighting Your Home

Have you ever wondered how many li[illegible] fixtures you have in your home? Look at the chandelier hanging in the hallw[illegible]r above your dining room table. Don't forget the lights on the front porch [illegible]d on the patio in back. How many do you have? Thirty? Forty? More?

These days, homes come equip[illegible]d [illegible]h recessed lighting, rail lighting, multiple-socket fixtures, and several outsi[illegible] amps. We love o[illegible] lights. Unfortunately, most (if not all) [illegible]hese fixtures are fille[illegible] with variou[illegible]yles of incandescent lightbulbs that can be e[illegible]nsive to operate.

More t[illegible] 20 y[illegible]s ago, however, the **compact fluorescent lamp** (CFL), was intro[illegible]ced to [illegible]e market T[illegible] lighting uses a completely different method of produ[illegible]g light tha[illegible] the t[illegible]tional incandescent bulb. The bottom line is CFLs create [illegible]ore light with [illegible]lectricity, making them 4 to 5 times more efficient than tr[illegible]ional incandescent bulbs.

[illegible] there's a catch: CFLs may cost 6 to 10 times more than incandescent bulbs. A[illegible]L can cost between $3 and $10. An incandescent bulb can cost between $0.3[illegible]nd $1.00. But you save money in the long run because CFLs save so much electricity—and you don't have to replace them as often as incandescent bulbs.

An even newer generation of lighting uses light emitting diodes, or LEDs, to produce light. An electrical current passed through semiconductor material illuminates many tiny LEDs, which together equal the light output of a traditional lightbulb. When designed well, LED lighting can be more efficient, durable, versatile, and longer lasting than incandescent or CFL lighting.

LEDs are now being incorporated into bulbs and fixtures for general lighting applications. LEDs are "directional" light sources, meaning they emit light in a specific direction, unlike incandescent and CFLs, which emit light—and heat—in all directions. For this reason, LED lighting is able to use light and energy more efficiently in many application. An investment in LED lighting will cost more initially, but their longer life means you'll save money in the long run. And as they become more popular, prices will come down.

There are more lighting choices available on store shelves than ever before. No matter which one you choose, look for the Energy Star label. Energy Star means high quality and performance.

To predict how much money you can save, you need to know a few things:

How many of your incandescent lightbulbs can be replaced with CFLs?	
What wattage of incandescent bulb are you currently using?	
What wattage of CFL would you use?	
How many hours a day do you use the light?	
How much do you pay for 1 kilow of electric	

Now, plug your answers into is formula:
Watts saved (wattage of i nd bulbs *ubtrac d* by wattage of CFL) *times* number of fixtures in the home that ca be replaced with CFLs *times* number of hours lights are used per day *tim* 365 days per year *divided* by 1,000 watts =_____

This is the number of kilowatts you will save each year.

To find the number of dollars you will save, simply multiply this number by the cost you pay for each kilowatt-hour of electricity as found on your electricity bill. This is how much you will save each year simply by changing your lightbulbs.

How Much Money Will You Save?

Most people who use incandescent bulbs for more than two hours a day will save money switching to CFLs—even though CFLs cost more at the store.

You'll save more money if:

- *You replace more incandescent bulb th CFLs.*
- *You replace larger bulbs.*
- *The cost of CFLs decreas*
- *The cost of electricity increa*

The Bright Future

In 2007, Cong s passed the Energy d ndence and Security Act, a law that quir many c ges to U.S. energy po y, including new standards for the energy efficiency f lightb s.

Contrar o public p ep n, the law didn't "ban" the incandescent lightbulb. Inst it focused on ergy efficiency, requiring common lightbulbs to use at l t 25 percent less energy than traditional incandescent bulbs. In recent years, vanced incandescent bulbs that are indistinguishable from the old style—but m t the new standards—have hit the market. CFL and LED lightbulbs already mee he new standards.

Stricter standards will be phased in through 2020, by which time all lightbulbs must be at least 70 percent more efficient than current incandescent bulbs—a requirement roughly equal to today's CFLs.

There are some exemptions. For example, the law does not require energy-efficient replacements for candelabras, refrigerator bulbs, three-way bulbs, and several other specialty lights.

But the idea of the new law is to save energy, and that's something you can start doing today.

Selecting Which Fixtures to Re-Light

To begin your re-lighting project, conduct a simple lighting audit. This will tell you how many fixtures you have in each area of your home, which of these fixtures should be replaced with CFLs, and how many watts of electricity you can save by switching.

Use the Re-Lighting Audit Worksheet (at the end of this chapter) to conduct a walk-through inspection of your home.

When looking at a light fixture, pay close attention to the type of bulb currently being used. Normal incandescent lightbulbs, like those found in table lamps, are different from the reflective bulbs used in recessed lighting. Likewise, fancy bulbs found in chandeliers need special replacements, while bulbs that are already fluorescent don't need to be changed. There is a re-lighting audit worksheet on page 22 to help you identify the bulb type as incandescent (INC), fluorescent (FLUO), fancy (FANC), or as another type of bulb that requires special consideration (OTH).

Also note when a bulb is used with a dimmer switch or three-way socket. These can be a safety concern and should be replaced only with CFLs specifically designed for these purposes. Outdoor spotlights are another specialty item; note them in the audit so you can find a proper replacement.

Finding the Right CFL

There are two basic factors to consider when selecting the right CFL for the job: size and style. In the beginning of CFL development there were many styles to choose from—and none were easy to install. Often, the old CFL would project from the light fixture, or the shade would need to be retrofitted, or the lamp's metal harp would need to be replaced. Today, however, selection is easy and most bulbs fit nicely into existing fixtures with no problem.

The most common types of CFL bulbs fit into most light fixtures. They come in a variety of wattages, so any incandescent bulb from a 25-watt ightlight to a 100-watt recessed ceiling light to a 150-watt spotlight can easily be p ed with a CFL. There are several manufacturers with different wattage and lum ra gs on their bulbs. You can buy CFLs at hardware stores, building-supply ou s, gen l merchandise stores, and even some grocery stores. g them is easy. eck the package carefully to ensure you are buying a produc hat ts your repla ment needs. Some CFLs have special functions designed fo imme tches, thre way sockets, recessed lighting, or outdoor installation. Alw ys make ou buy he right CFL for the job.

A Dim Idea

Dimmer switches are a popu e in many omes They provide a way to increase and decrease the lighting in an area—an a way to save on energy bills. When an incandescent lightbulb is dimmed by 25 ercent, it uses about 20 percent less electricity than when it's ope g a strength. That saves money and increases the life span of the lightbulb.

The dimmer switch works by breaking up the amount of electricity that reaches the light fixture. Although we can't see it, the dimmer does this by making the light flicker. That's fine for an incandescent bulb, because it reduces the amount of heat the filament produces. But CFLs do not use heat to make light.

So does that mean you can't use a CFL with a dimmer switch? Far from it.

There are many dimmable CFLs and LEDs available, especially at big box stores with a larger selection of bulbs. But make sure the packaging says the bulb is dimmable. Installing the wrong bulb could pose a fire hazard.

Getting Enough Light

When you replace an incandescent lightbulb with a CFL, you want to end up with the same amount of light coming fro your fixture. So when selecting a new CFL, pay close attention to the bulb's men output, or the measurement of the amount of light the bulb produces.

To figure out the lumen outp use th chart on page 21. It shows how many lumens the new CFL must produ be similar to the old incandescent bulb.

The Right olor of Light

T two o r aspects of lighting y u should know about, because they affect the colo f the lig in your home They are *color rendition* and *color temperature*.

You will tice a sligh ol hange in a room when you install CFLs. The reason has do with the col quality of the light, which is measured using a **color-ndering index** (CRI). This index is scored from 0 to 100 and it measures the htbulb's ability to produce a full spectrum of color. Incandescent bulbs typically h a CRI of between 92 and 98. Most CFLs, however, have a CRI of between 82 and

The color of the light itself will also look a little different. Incandescent bulbs typically have a warm yellow glow, while CFLs do not. That is because of the difference in the warmth of the visible light. That warmth is measured in Kelvins (K) and is called the **correlated color temperature** (CCT). The higher the CCT rating is for a light, the cooler the light appears. Neither affects your ability to see with a CFL bulb.

CFLs and LED bulbs produce light in a variety of shades, from yellow to white to blue. Check the Kelvins (K) on the package to find the right color for you.

- **Warm yellow light** (2700–3000K) is the standard color of incandescent bulbs.
- **Cool white light** (3500–4100K) is good for kitchens and work spaces.
- **Blue light** (5000–6500K) is good for reading and other detailed tasks.

The Right Bulb for the Job

There's another type of fluorescent lighting you're probably familiar with: fluorescent tubes. They're often used for ambient lighting in large indoor areas, such as kitchens, laundry rooms, or workshops. In these areas, their low brightness creates less direct glare than incandescent bulbs or smaller spot-lighting CFLs.

Fluorescent tubes are often identified as T12, T8, or T5 (the "T" stands for "tube" and the number indicates the diameter of the tube in eighths of an inch). They're installed in dedicated fixtures with built-in ballasts and come in different color temperatures.

In order to comply with federal energy conservation standards, T12 production began to be phased out in 2012. This means T12 ballasts will need to be replaced by a qualified electrician with ones that are safe for the more efficient T8 or T5 tubes.

Safety First

If a CFL bulb breaks while you are trying to install it, or at any other time, take extra precautions when cleaning up. CFLs contain a very small amount of mercury, about 5 milligrams, or roughly the amount needed to cover the tip of a ballpoint pen. This mercury is sealed inside the bulb's glass tubing. None of it is released unless the bulb is broken.

If that happens, the U.S. Environmental Protection Agency recommends following these guidelines for cleanup:

1. *Open a window and leave the room for 15 minutes or more.*
2. *Using stiff paper or cardboard, carefully scoop up the glass fragments and the powder, then put them inside a plastic bag and seal it. Do not use your bare hand to do this. Use disposable rubber gloves, if possible.*
3. *Wipe the area clean with damp paper towels or with disposable wet wipes. Put those disposable towels or wipes into the same plastic bag. Do not use a vacuum or a broom to clean up the bulb.*
4. *Place all of your cleanup materials in a second plastic bag. Put the first bag into the second bag, seal it tight and put it in an outdoor trash container. If your city requires CFLs be recycled, keep the bag in a protected outdoor area before taking it to the local recycling center. Wash your hands after disposing of the bag.*
5. *If a CFL breaks on a rug or carpet, remove everything you can without using a vacuum cleaner. Use sticky tape or duct tape to pick up small pieces of glass and powder. If the area must be vacuumed do so after picking up all visible pieces. Vacuum the area, then remove the vacuum bag (or empty and wipe the canister) and put the bag or vacuum contents into two sealed plastic bags in the outdoor trash for disposal. If you are required to recycle CFLs, put the bag in a protected outdoor area before taking it to the recycling center.*

Disposal

Your CFLs will last a long time—up to 10,000 hours of use. But, eventually, they will burn out. When they do, look for a local recycling center that can dispose of them. You can either call the local solid waste agency in your city or look online. Check www.earth911.org and www.epa.gov/bulbrecycling for local CFL recycling options.

Some states allow used or broken CFLs to be disposed of in the regular garbage. If that is the case in your area, seal the bulb in two plastic bags and put it into the outdoor trash can. Do not dispose of CFLs in an incinerator.

Consult the following chart to determine what CFL wattage is best to replace your incandescent light bulb:

Incandescent Light Bulbs	Minimum Light Output	Energy Star–Rated CFLs
40	450	9-13
60	800	13-15
75	1,100	18-25
100	1,600	23-30
150	2,600	30-52
WATTS	LUMENS	WATTS

Things to remember when re-lighting:

- *CFLs last 8 to 10 times longer than an incandescent bulb.*
- *CFLs use a quarter of the electricity of an incandescent bulb.*
- *CFLs are usually cost effective when the fixture is on more than two hours per day.*
- *CFLs come in many different styles to meet the needs of each fixture.*
- *CFLs give off a cooler light; they don't look as warm as an incandescent bulb.*
- *Specialty CFLs can be used with dimmer switches and in three-way sockets.*
- *Conduct a lighting audit to see which fixtures should have CFLs installed in them.*
- *Find the CFL that best meets your lighting output for the area.*
- *Some CFLs will start slower and begin dimmer in cold weather.*

Re-Lighting Audit Worksheet

In each room of the house, inventory the light fixtures and number of bulbs. Mark each bulb in the appropriate column—incandescent (INC), fluorescent (FLUO), fancy (FANC), or other (OTH)—and make sure to note its wattage. Also note fixtures with dimmer switches and three-way sockets.

You must also determine how many hours a bulb is on during a typical day. Remember, only those used at least one and a half to two hours per day should be considered for CFL replacement.

Kitchen

Types of Lighting Fixtures	No. of Bulbs	Watts	Type of Bulbs				Hours of Daily Use	Replace?	
			INC	FLUO	FANC	OTH		Yes	No
Ceiling light									
Recessed lighting									
Over the sink									
Other									
Other									
Other									

Dining Room

Types of Lighting Fixtures	No. of Bulbs	Watts	Type of Bulb				Hours of Daily Use	Replace?	
			INC	FLUO	NC	OTH		Yes	No
Chandelier									
Wall sconces									
Floor lamp									
Recessed lighting									
Other									
Other									

Living Room

Types of Lighting Fixtures	No. of Bulbs	Watts	Type of Bulbs				Hours of Daily Use	Replace?	
			INC	FLUO	FANC	OTH		Yes	No
Table lamp 1									
Table lamp 2									
Ceiling light									
Floor lamp									
Recessed lighting									
Other									

L y Roo / Hall

Typ of Lighting xtures	N of Bulbs	Watts	Type of Bulbs				Hours of Daily Use	Replace?	
			INC	FLUO	FANC	OTH		Yes	No
iling light 1									
C g light 2									
Floor lamp									
Recessed lighting									
Other									
Other									

Bathroom 1

Types of Lighting Fixtures	No. of Bulbs	Watts	Type of Bulbs				Hours of Daily Use	Replace?	
			INC	FLUO	FANC	OTH		Yes	No
Ceiling light									
Mirror light									
Tub/shower light									
Recessed lighting									
Other									
Other									

Bathroom 2

Types of Lighting Fixtures	No. of Bulbs	Watts	Type of Bulbs INC	FLUO	FANC	OTH	Hours of Daily Use	Replace? Yes	No
Ceiling light									
Mirror light									
Tub/shower light									
Recessed lighting									
Other									
Other									

Bedroom 1

Types of Lighting Fixtures	No. of Bulbs	Watts	Type of Bulbs INC	FLUO	FANC	OTH	Hours of Daily Use	Replace? Yes	No
Ceiling light									
Table lamp									
Floor lamp									
Other									
Other									
Other									

Bedroom 2

Types of Lighting Fixtures	No. of Bulbs	Watts	Type of Bulb INC	FLUO	ANC	OTH	Hours of Daily Use	Replace? Yes	No
Ceiling light									
Table lamp									
Floor lamp									
Other									
Other									
Other									

Bedroom 3

Types of Lighting Fixtures	No. of Bulbs	Watts	Type of Bulbs INC	FLUO	FANC	OTH	Hours of Daily Use	Replace? Yes	No
Ceiling light									
Table lamp									
Floor lamp									
Other									
Other									
Other									

O / Othe

Typ f Lighting tures	of Bulbs	Watts	Type of Bulbs INC	FLUO	FANC	OTH	Hours of Daily Use	Replace? Yes	No
eiling light									
Ta lamp									
Floor lamp									
Recessed lighting									
Other									
Other									

Garage / Outdoor

Types of Lighting Fixtures	No. of Bulbs	Watts	Type of Bulbs INC	FLUO	FANC	OTH	Hours of Daily Use	Replace? Yes	No
Ceiling light									
Security light									
Porch light									
Recessed lighting									
Other									
Other									

Heating Your Home

Your furnace is the engine that heats your home. It's one of the first things to look at when trying to cut your energy costs because your heating and cooling systems are responsible for 35 percent of an average home's energy bill.

Regular maintenance is key to preventing future problems with your system—and to preventing unwanted costs. Dirt and neglect are the main causes of failure for heating and cooling systems. With the average heating bill alone topping $1000 you have a lot to gain by making sure your system works properly.

Professionals can take a number of steps to tune up your heating system. But before calling them in, do a bit of maintenance yourself.

Standard Furnace

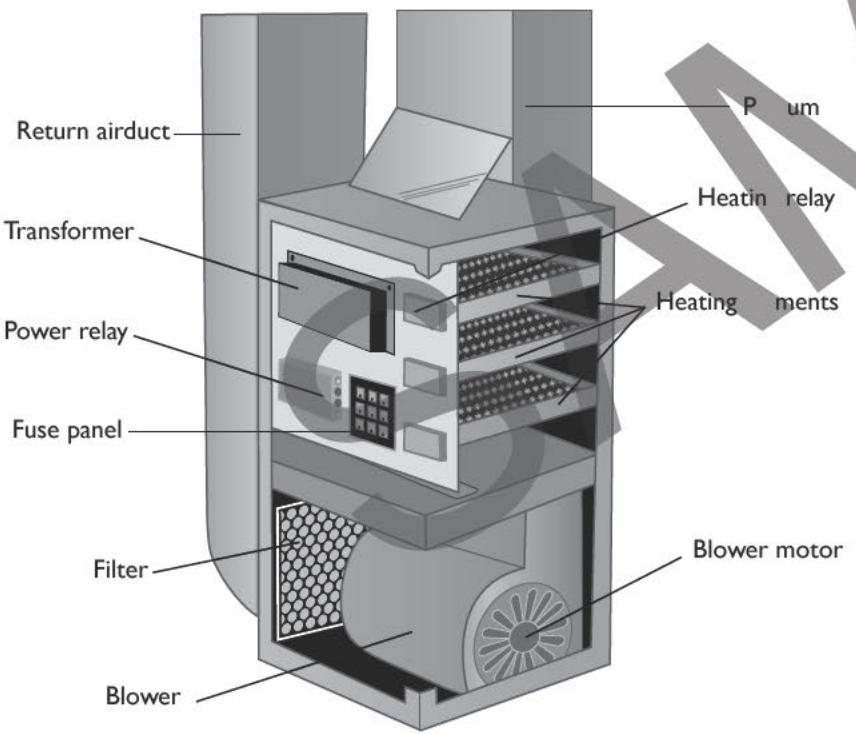

Yearly Checkup

Each year before the weather gets chilly, check your furnace. Make sure nothing flammable or dangerous was stored against it during the summer months. Turn it on for a few minutes to make sure it is working. It is better to find out now that your furnace is broken than on the first cold day of fall, when everyone else is calling the repairman.

When you turn on the furnace f the first time in the fall, it may give off a very bad smell. This is usually bec e it is burning off all of the dust that fell into it over the summer. The smell should away quick If it doesn't, it could mean something serious. Contact a repairman.

Clean the Registers or Radi ors

Make sure you gisters (if you have a air heating system) or your radiators you e a bo based system) are clean.

For reg ers, rem e the c and wipe the register with a damp cloth. Remove any obj s that fell th u he cover into the top of the duct. Use a vacuum to clea he area, then replace the cover.

or radiators, wipe down the top and sides with a wet cloth.

Fo both systems, survey your room to make sure rugs, carpets, drapes, and furni ure aren't too close to the register or the radiator.

Check the Temperature

Set your temperature to 68 degrees in the winter and 78 degrees in the summer to save money on your heating and cooling bills. If you have a programmable thermostat, have it turn down your heating in the winter by about 8 degrees at night or while you are at work during the day. You might not even notice the drop in temperature if your home is well insulated—but you will notice the savings on your bill.

Inspect the Furnace

Look for any soot or combustion residue around the furnace. Soot build-up means your furnace is not combusting properly. If you see soot build-up, call a furnace technician.

Inspect the Flue

Birds or squirrels sometimes build nests in the tops of flues, so a quick visual inspection is a good idea. Also look for cracks in chimneys or flues. If you see anything unusual, call a professional.

Install a Carbon Monoxide Detector

There is always a chance carbon monoxide could leak from your furnace into your home. Normally, the carbon monoxide made by your furnace is vented out of your home. But if something goes wrong, the dangerous gas can build up inside your home. In homes where a combustion furnace or appliance exists, including gas water heaters (but not electric furnaces, heat pumps, and electric water heaters) a carbon monoxide detector should be installed. Carbon monoxide is a dangerous toxic gas, but because it's colorless, odorless, and tasteless, it's almost impossible for people to detect. You can buy an easy-to-install carbon monoxide detector at many retailers, and some are also included in newer alarm systems.

Change the Filters

Every house circulates small amounts of airborne debris; you'll see it as dust on top of tables and as dust bunnies beneath the sofa. That debris also circulates through the ducts in your house when you use a forced-air heating system or a central air-conditioning system. Your furnace's filter cleans the air, but it needs to be cleaned or changed regularly.

When to Call for Help

Most of us only call the repairman when the heating system breaks—usually during the peak of heating season. But many of those calls could be avoi he system is cleaned and maintained regularly.

That's where a "clean and tune" comes in. This is a regular checkup nduct by a professional that usually costs from $100 to $ 50 he clean and t saves you money in the long run by making your system ficien ough to cu p to 10 percent from your energy bill. The technician will st your s m to see w efficient it is and then clean and adju to make it m e effici .

Oil-powered and kerosene h ting systems should be erviced every year; gas-powered heating systems sh uld be serviced every tw years. Electric furnaces, heat pumps, and central air-co ditionin ms uld a be serviced every two years. The best time to do this is spring, when s t and esidue are still soft and easy to clean. It is important to have this work do by a professional.

Finding a Professional

To find a contractor, start by asking friends and neighbors if they have worked with a contractor they would recommend. Look for licensed, insured contractors and ask about previous experience. Also ask for references—and check them. You can call the Better Business Bureau to see if any complaints have been filed against the contractor.

How to Clean Your Furnace's Filter

Cleaning or replacing the filter is simple. This is something you should do every month in the winter, and at least once per season the rest of the year.

Step 1: Make sure the furnace is turned off. This prevents the furnace from opera g with no filter while you are changing it d it keeps the fan from making it difficult place the new filter into position.

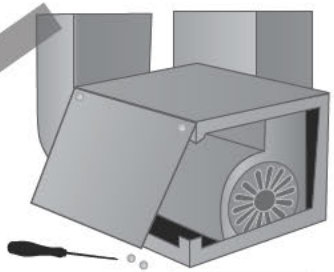

Step 2: Find the filter. It's usual ell marked, and most e a cover plate that 18 to 24 inches long. der furnaces somet s d h ver pla their filters should easy to see.

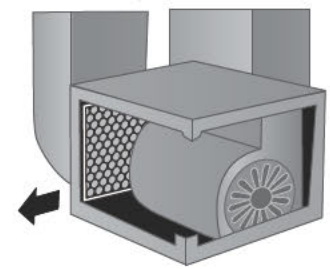

Step : Remove the er plate and slide the fi out of the furnace along its tracks. This es not usually require any tools, although a fe cover plates are fastened in place with small scre

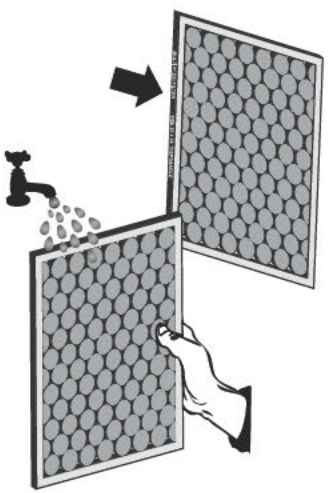

Step 4: Check to see whether the filter is disposable, or if it is intended to be cleaned and replaced. This should (but may not) be marked on the edge of the filter. Filters that are intended to be cleaned should have directions for cleaning printed on them. If the filter is disposable, look for its size and make a note of it. Buy a replacement filter of the same size. Disposable filters are inexpensive and can be purchased at hardware or big box stores. It's a good idea to have one or two extra filters on hand.

Step 5: If your old filter is disposable, throw it away. If it is cleanable, follow the directions given to clean it. Make sure to let the filter dry if you have rinsed it. Install the new or cleaned filter and replace the cover plate.

Measuring Efficiency

The technician should test the efficiency of your heating system both before and after the clean and tune. The technician should show you the results of these tests, which will tell you two things: whether the efficiency of your heating system has been improved, and whether the system is running at an acceptable level. This is especially important if you are thinking about buying a new heating system.

Cleaning and Adjusting Your System

On all systems, the technician should:

- *Check the condition of your vent pipe and chimney to see if it has deteriorated over time.*
- *Inspect the heat exchanger. This is where your furnace or boiler heats up the air it sends into your house. In boilers, leaky heat exchangers leak water, making the problem easy to spot. In furnaces, cracked or broken heat exchangers mix dangerous combustion gases with the house air and potentially send carbon monoxide into the house—a big safety concern. This situation requires immediate repair, and it's why trained technicians should inspect your heating system every year or two, especially as it ages.*
- *Adjust controls to maximize efficiency for water and air temperature.*
- *Lubricate all moving parts to reduce the amount of friction.*

In forced-air systems, the technician should:

- *Check for cracks in the combustion chamber.*
- *Clean and oil the blower.*
- *Test for carbon monoxide and fix any problems rela d to*
- *Remove dirt, soot, and corrosion from the furnace.*
- *Adjust the blower control and sup emperature.*
- *Check fuel input and adjust necessary.*
- *Seal the connections betw n the furnace and main duc*

In hot water systems, the technician should:

- *Test the pressure relief valve, which maintains th boiler's water pressure.*
- *Test the high-limit control, a safe f at hat turns off the boiler if the water temperature goes too high.*
- *Inspect the pressure tank, which should be filled with air, to ensure it's not filled with water.*
- *Clean the heat exchanger.*

In steam systems, the technician should:

- *Drain water from the boiler to remove sediments. This improves efficiency.*
- *Test the low-water cutoff and the high-limit control—two safety features that shut off the boiler if the water temperature reaches unsafe levels.*
- *Drain the float chamber to remove sediments.*
- *Examine the water in the boiler and d chemicals if necessary to control deposits and corrosion.*
- *Clean the heat exchanger.*

S anda Boiler

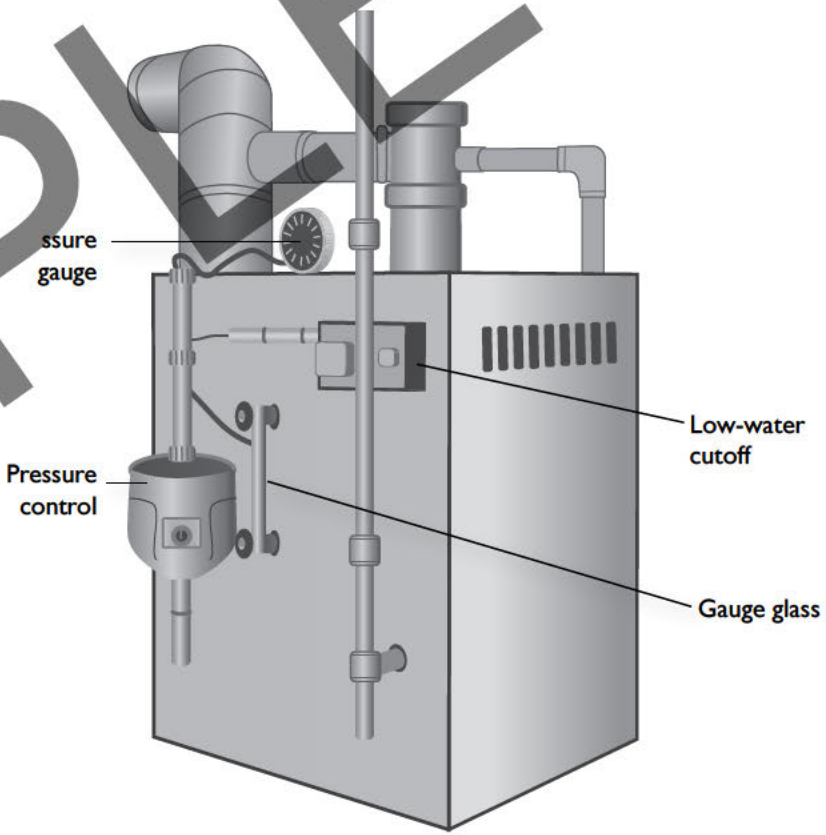

Space Heaters

Small space heaters typically are used when the main heating system of a house is not enough, but they should only serve as a backup. Do not heat an entire house with space heaters alone; it is a safety hazard.

One of the main safety concerns with space heaters is ventilation. Most states have banned unvented kerosene heaters from indoor use, and at least five have banned unvented natural gas heaters in homes. Using these heaters can be a safety hazard for your family.

Electric space heaters are the only ones that are safe to use indoors. While they don't harm the air quality of the house, electric space heaters can still cause fires and should be used with caution. Though they don't harm the air quality of the house, electric space heaters can still cause fires and should be used with caution.

Space heaters should always be plugged directly into an electric outlet and should never be used if the cord or plug is damaged.

Each year, space heaters cause more than 25,000 residential fires, resulting in more than 300 deaths. An estimated 6,000 people per year are treated at hospital emergency rooms for burns caused by touching the hot surfaces of room heaters.

Follow these guidelines when buying and using a small space heater:

- *Only purchase a newer model with all current safety features. Make sure it has the Underwriters Laboratories (UL) label attached.*
- *Select a heater of the proper size for the room you wish to heat. Most come with a general sizing table so you don't buy one that's too big.*
- *Place the heater on a level surface away from foot traffic. Take car ep children and pets away from it.*

Space heaters usually have a capacity of 10,000 to 40 000 Btu per hou Most r on the air circulation of a room to heat the area, but om use infrared ra ion to directly heat up objects and people nearby.

Heaters are classified as either vented or unvented. Ve ed heat a designed to be permanently installed next to utd wall, so th as the heate duces can be vented to the outside Unvented combustion h ters (sometimes labeled "vent free") should not be us indoors because they ca roduce poisonous gases like carbon monoxide.

Using Your Thermostat to ut Heating and Cooling Bills

Control the Temperature of Your Home

One of the best ways to save on your home's heating bill is to control the temperature you set to heat your home. It's one of the simplest changes to make and leads to some of the biggest savings. The same is true for controlling the temperature you set to cool your home.

A programmable thermostat makes it easy to control the temperature in your home—and maximize your savings. When used properly, programmable thermostats can save up to $150 a year, according to Energy Star. Most people save enough money on their heating bill to pay for the thermostat within one year of installing it.

Those who benefit most are away from their home for long periods of time during the day. That is because programmable thermostats turn down the temperature when you leave home and turn it ba p before you arrive home. The longer the temperature is set back, the mor money you save.

Buy a Programmable T ermostat

Look for a thermostat with the gy Star rating. The program qualifies three types of the mostats: 7-day mode 5+2-day model nd 5-1-1-day models.

Seven-day mo ls let you create dif nt edules for each day of the week. T mode se separate schedule or weekdays and weekends. The 5-1-1 models l you ha ne schedule fo weekdays and different schedules for Saturday and Sund

In th inter, save ener by setting the thermostat to 68 degrees while you are a ke and then lower it while you are asleep or away from the house. In the mmer, keep the house warmer than normal while you are away and set the t mostat to 78 degrees while you are home.

Prog mmable thermostats can be more complicated to understand and set, so be sure to keep the instruction manual handy.

Programmable Thermostat

A programmable thermostat is the best way to control the temperature of your home, especially when you are away. When used properly, the money you save on heating or cooling your home will pay for the device in only one year.

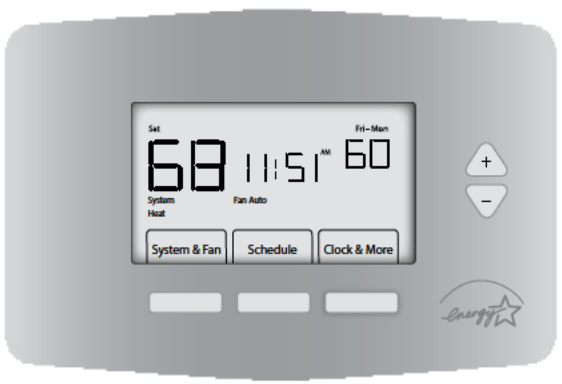

This thermostat is set for 68 degrees in the winter when someone is in the home. Then when the occupants are away during the day it goes down automatically to 60 degrees.

Program Your Thermostat

Think about your family's schedule. Set back the temperature at times when no one will be home for four or more hours. Also think about the time you normally wake up and the time you go to sleep. Set back the temperature an hour or two before you go to bed in the winter; you won't usually notice the house cooling off while you get ready for bed.

To use the thermostat properly, make sure it is set to save energy for long periods of time. Eight hours is a good minimum, both at night when you are sleeping and during the day when no one is home. If you need extra heating, use the manual override. It won't erase the preset schedule, but it will use more energy—and cost more—if you do this often.

Call a Heating, Ventilating, and Air-Conditioning (HVAC) Professional to Install a New Thermostat

An HVAC technician can upgrade an old manual thermostat to a programmable one and find the right unit for heating systems that use heat pumps. Thermostats should be installed on interior walls, away from vents, doorways, windows, or any other heating, cooling, or vent source. If it is in a place where the temperature changes frequently, the thermostat will sense that the room is hotter or colder than it actually is, making it cycle on and off more often than needed.

You should also:

- *Consider installing multiple thermostats if you have multiple heating and cooling zones in your home.*
- *Change the batteries each year.*
- *Avoid using the "hold/permanent/vacation" feature when managing day to day settings; use it when going away for a weekend or longer.*
- *Avoid extreme settings. Setting your home to 90 degrees will not heat the home any faster, nor will setting your air conditioner to 40 degrees cool it more quickly.*

Air-Conditioning

Cooling your home is just as important as heating it, and in some areas, it can be just as costly.

Home air conditioning accounts for more than 8 percent of all the electricity produced in the United States for these purposes, at a cost of over $15 billion, according to the American Council for an Energy-Efficient Economy.

There's a lot of room for savings. Today's most efficient air conditioners use 30 to 50 percent less energy than those made in the mid-1970s, according to the U.S. Department of Energy. If your air conditioner is 10 years old, you can save 20 to 40 percent of your cooling costs by replacing it with a new, high-efficiency model.

Reduce Your Cooling Needs

Before you consider buying a new air-conditioning system, you can make smaller changes to reduce your need for air-conditioning in the first place.

Make Sure Your Home Is Well Insulated.

Insulation keeps you warm in the winter by sealing your home so that outside air doesn't sneak indoors. But a well-sealed home will keep cool air inside your home in the summer. Make sure to check the insulation near your attic to ensure there are no air leaks—a big waste of energy, and of your cooled air.

Look at Your Appliances

Inefficient appliances produce high levels of heat. Think about getting rid of any old or extra refrigerators you have, and unplug your electronics when you are not using them so they don't produce extra heat.

Check Your Windows

Much of your home's heat enters through its windows. Locate the wall that gets the most summer sun and make sure any new windows you install there have low-E coatings to block the unwanted heat gain. Consider planting trees for shade or creating an overhang to artificially shade the windows. Keep the window coverings closed on this side of your home during the summer to keep the heat out.

Colors and Efficiency

Even something as simple as the color of your home can affect the amount of heat it gains. When you paint your home or replace its roof, choose light-colored materials. They will cut down on heat gain and reduce your peak cooling demand by as much as 15 percent, according to the American Council for an Energy-Efficient Economy.

Use a Fan First

When your home does get warm, turn on a fan before turning on the air conditioner. Fans use less energy and can be very effective unless the indoor humidity is stifling. Fans cool people by circulating the existing air—not by reducing the room's temperature—so turn them off when you leave a room.

If you are purchasing a new fan for your home, invest in a ceiling fan, which is more efficient than other types. Choose an Energy Star–rated fan, which is 50 percent more efficient than a conventional fan. Ceiling fans work best in rooms with a ceiling of at least 8 feet, and are best installed when the blade is 10 to 12 inches below the ceiling and 7 to 9 feet above the floor.

Ceiling fans are also a good addition for a home with air-conditioning. Running a ceiling fan allows you to raise the thermostat on your air-conditioning system by about 4 degrees with no noticeable change in comfort, according to the U.S. Department of Energy. In mildly hot weather, fans can keep you [illegible] enough to avoid using the air conditioner altogether.

Window fans are another effective option. They are best used in win[illegible]ws fac[illegible] away from the prevailing wind, where they can b[illegible] w[illegible]t air out of t[illegible] home rather than bringing new air into the home. To cool y[illegible]ur ho[illegible] close the w[illegible]dows near your fan and open windows in the rooms far aw[illegible]y from i[illegible]eferably o[illegible]he windward side of the home, so the breeze will blow[illegible]n throu[illegible]t [illegible] windows, circulate through the house, an[illegible] exhau[illegible] out throug[illegible]th window fa[illegible] Shaded windows are the best for this [illegible]take breeze.

Maintenance

The filters, coils, and other parts of your air cond[illegible]oner need regular maintenance for it to be as efficient as possible.

Your primary maintenance task is **replacing or cleaning the filter on your air conditioner**. Dirty or clogged filters block airflow and reduce efficiency. Keeping the filter clean can lower your system's energy use by 5 to 15 percent. You should do this every month or two during the cooling season, but the filters can require more frequent maintenance if the machine is in constant use, if you live in a dusty area, or if you have pets that shed a lot.

Also make sure to have your air-conditioning system checked well before cooling season begins each year. Once the weather becomes hot, technicians are in greater demand and are harder to schedule. An easy way to remember is to schedule preseason maintenance appointments for your heating and cooling systems near the daylight savings time changes in spring and fall.

During the checkup, the technicia[illegible] should:

- *Clean the evaporator and conde[illegible] air-conditioning coils. These coils collect dirt over time, which reduces airflow [illegible] insulates the coil, lessening its ability to absorb heat and to cool your home.*
- *Check the coil fins. These alu[illegible]num fin[illegible]e easily bent and can block airflow through the coil; the technician will use [illegible]fi[illegible]mb" to comb the fins into their proper position.*
- *Clean [illegible]d adjust blower comp[illegible]nts to provid[illegible] proper system airflow. Airflow problems [illegible]n reduce a system's effi[illegible]ncy by [illegible]o 15 percent and reduce comfort.*
- [illegible]ck refrig[illegible]ant levels in central air-c[illegible]oning systems. Recharging the refrigerant can [illegible]prove[illegible]ficiency by 20 percent, according to the American Council for an Energ[illegible] Efficient [illegible]onomy.*
- *Che[illegible] the conden[illegible]e d[illegible] in a central air conditioner, furnace, or heat pump in[illegible]llation. Condens[illegible] drains can become plugged from dust and slime that [illegible]aturally accumulates inside the unit, causing water damage and affecting humidity levels indoors. For preventative maintenance, condensate drains should be cleaned once a year.*
- [illegible]heck thermostat settings to ensure it's programmed both to keep you comfortable and to save energy.*
- *Measure airflow over the indoor coil. Correcting airflow problems can improve efficiency another 5 to 10 percent, according to the American Council for an Energy-Efficient Economy.*
- *Tighten all electrical connections and measure the voltage and current on motors.*
- *Lubricate all moving parts of the system.*
- *Ensure the system starts, operates, and shuts off properly.*

How a Central Air-Conditioning System Works

Central air conditioners have two main units: an indoor unit with an evaporator or "A" coil, and an outdoor unit with a compressor and condenser unit. These two components work together to cool and dehumidify your household air.

When warm household air is passed over the evaporator coil, the coil removes heat from the air. At the same time, water vapor in the air condenses on the cold surface of the coil and is drained away. Unwanted heat removed from household air is transferred to the condenser unit located outdoors. The cooler, drier air is then circulated throughout your home by your existing furnace system's fan and ductwork. The end result is a more comfortable environment that your whole family will enjoy.

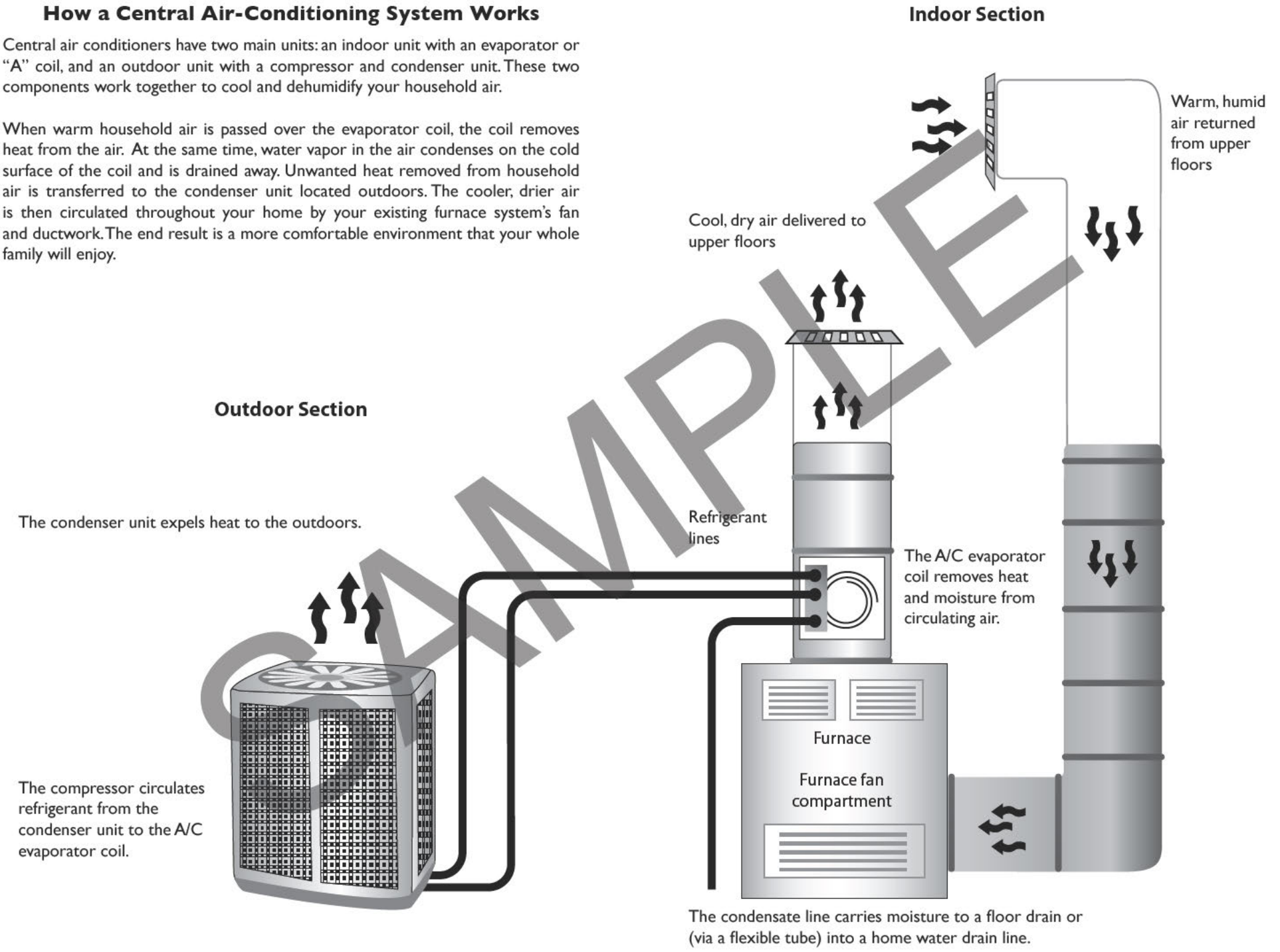

Operating Your System Efficiently

Instead of running your air conditioner constantly, use it only when fans and other forms of ventilation are not enough. Turn the thermostat up when you leave the house for several hours—or, better yet, install a programmable thermostat so this is done automatically. When you do run the air conditioner, keep your doors and windows closed to keep the cooled air inside your home. Run hot water appliances in the evening, and shower with the exhaust fan on to minimize indoor humidity.

If you have a room air conditioner, check the seal between the air conditioner and the window frame before each cooling season. The seal should make contact with the unit's metal case. Moisture can damage the seal and allow cooled air to escape from your home. Make sure to either cover your room air conditioner or remove and store it during the winter.

Take time to plan before installing a room air conditioner. It should be level when you install it so that the drainage system inside the machine operates efficiently. Put it in a shaded spot on your home's north or east side, if possible, because putting it in direct sunlight can decrease its efficiency by as much as 10 percent. You can also plant trees and shrubs to shade the unit, if they do not block the airflow.

Check the interior location, as well. Don't place electronics or televisions near the unit's thermostat, which can sense heat from those appliances and [illegible] the unit to run longer than necessary.

Set the thermostat as high as comfort will allow in the summer. The [illegible]aller difference is between the indoor and outdoor [illegible]ratures, the lo[illegible]r your cooling bill will be. Set the fan on high except on [illegible]ry h[illegible]id days, whe[illegible] low setting will optimize comfort by removing more mo[illegible]ure from [illegible]e air by c[illegible]ling it at slower speed. To maximize your comfort, try us[illegible] an inte[illegible] near y[illegible]ur window air conditioner to spre[illegible] he[illegible]led air thr[illegible]gh[illegible] your ho[illegible] with a minimal increase in your elect[illegible] use.

When to Replace

If you have minimized your cooling needs but your [illegible]oling system is still inadequate it could be time to replace your air-conditioning [illegible]stem.

If the air conditioner or heat pump is more than 10 years old, consider replacing it with an Energy Star–rated model. The extra efficiency could save 20 percent on heating and cooling costs, according to Energy Star.

If your cooling system needs frequent repairs, you have humidity problems, your energy bills are going up, the system is noisy, or some rooms in your home are too hot or too cold, it is likely time for a new system.

Selecting a New System

Your contractor will perform several calculations to find the right system for your home. Proper sizing and installation are key elements in determining air conditioner efficiency. Too large a unit will not adequately remove humidity. Too small a unit will not be able to attain a comfortable temperature on the hottest days. Improper unit location, lack of insulation, and improper d[illegible]t installation can greatly diminish efficiency.

Central Air-Cond tioning

Central air conditioners are [illegible]ely used i[illegible]he United States and are the best way to keep comfortable in climates [illegible]t h[illegible] high levels of humidity. They circulate cool air through a system of ducts, wh[illegible] carry the coole[illegible]ir from the air conditioner into the ho[illegible] That air becomes wa[illegible]er as it cir[illegible]ates through the home, then it flows back to [illegible]e air conditioner and [illegible]e-c[illegible]ed.

Centra[illegible] cond[illegible]oners come in two types: a split system or a packaged unit. Split syst[illegible]s use a[illegible]utdoor me[illegible] unit with a condenser and compressor and an indoor u[illegible] with an e[illegible]pora[illegible] Packaged systems come with just one unit, which is usu[illegible] located on a r[illegible]or on a concrete slab next to your home's foundation.

[illegible]hese systems are rated according to their seasonal energy efficiency ratio (SEER), [illegible]ich measures the cooling output divided by the power input for an "average" cli[illegible]te in the United States. The higher the SEER, the more efficient the air cond[illegible]oner will be. Choose a central air conditioner with a SEER of 14.5. It should have a thermal expansion valve and a high temperature rating (EER) higher than 11.6, which is important for high-efficiency operation in the hottest weather. Your utility company may offer incentives for you to purchase this equipment, so check with them before buying. You can also look for an Energy Star–rated air conditioner; they are about 14 percent more efficient than standard models.

Sizing

Finding the right size central air conditioner is one of the biggest factors in determining how efficient the system will be for your home. The contractor will make several calculations to determine what size unit you need—but you must know what questions to ask to ensure the job is done properly.

The sizing calculations should not be based solely on the square footage of your home or on the size of equipment you currently use, because that system might not have been the right size in the first place. In older homes that were not well sealed, it was common to install heating and cooling equipment that was 2 to 4 times larger than needed. In today's homes, that's a big waste of energy.

The contractor should base his estimate on the amount of heat your home gains during the summer. To do that, he needs to factor in the following things: the

local climate, which direction your home faces, how well insulated your home is, how well the air leaks are sealed, the sealing of your ductwork, and the size of your windows and how much sun they receive. This calculation is usually done with software.

An improperly sized unit will cause many problems. If it is too large, the unit will not adequately remove humidity, and it will turn on and off more often than a system that is properly sized, which will shorten the life of the equipment. One that is too small, though, will not be able to reach a comfortable cool temperature on the hottest days. It will also reduce the efficiency of the air distribution and speed up wear on the system.

Heat Pumps

Heat pumps are much more efficient than central air conditioners and they can be used both to heat and cool some homes—especially in the southeastern states where the weather is mild. During the cooling season, heat pumps use electricity to move heat from your cool house into the warm outdoors. Because they move heat instead of generate it, heat pumps can provide 4 times the amount of energy they use.

Heat pumps are also measured with the SEER rating, which should be at the same 14.5 level as central air-conditioning units. Energy Star also rates heat pumps; they are 8 percent more efficient than newer conventional models and u[illegible] 20 percent more efficient than older ones.

Ductless Cooling Systems

Ductless cooling systems (also called mini-splits o[illegible] multi-[illegible]s) deliver c[illegible]l air to different rooms in your home without routing it t[illegible]ough du[illegible] first. A duc[illegible]ss air conditioner has two major comp[illegible]nts: a unit mo[illegible]ted o[illegible]n in[illegible] wall that delivers cool air to the room[illegible]d a unit mounted o[illegible]h[illegible] outside of t[illegible]e house. A pair of refrigerant lines run[illegible]etween the two, one del[illegible]ring electricity, the other taking away condensate (wat[illegible]. Ductless sy[illegible] are mo[illegible] expensive than window units but are much more ener[illegible] ffi[illegible] Energy[illegible]ver m[illegible]dels are available.

Room Air-Conditioning Un ts

Room air conditioners usually cost les[illegible] than central air-conditioning systems or ductless systems, even if you have to buy several for different parts of the home. They are less efficient than the others systems, but they can be less expensive to operate than whole-house systems if you use them to cool only the rooms you need to have cooled.

Room air conditioners are rated by EER, which is a measure of the cooling output divided by the amount of power they use. Look for a unit with a high EER; the higher the number, the more energy efficient it will be. Choose one with an EER of 10.8, or look for a model with the blue Energy Star label, which will use at least 10 percent less energy than a conventional model. Choose one with a filter that slides out easily for cleaning and that has controls like a digital thermostat and a built-in timer that allow you to adjust the unit to use less energy. Also note the voltage. Units rated 230 volts may require a special circuit.

Getting the right size is very import[illegible] If your room air conditioner is too large, it will turn on and off too often[illegible]asting energy. If it is too small, it will not cool well and it will overdry the[illegible]. You can use the chart from Energy Star to help calculate what size unit you n[illegible]d. Keep in[illegible]d that square footage is not the only factor that affects the capacity[illegible] the u[illegible] you need. If your room has high ceilings, is directly under the attic, or [illegible]everal windows that get the summer sun, consider a[illegible]it one or two classes[illegible]her than this[illegible]art suggests.

Ener[illegible] Usage[illegible] Are

Area to Be Cooled (square feet)	Capacity Needed (Btu per hour)
100 *to* 150	5,000
150 *to* 250	6,000
250 *to* 300	7,000
300 *to* 350	8,000
350 *to* 400	9,000
400 *to* 450	10,000
450 *to* 550	12,000
550 *to* 700	14,000
700 *to* 1,000	18,000
1,000 *to* 1,200	21,000
1,200 *to* 1,400	23,000
1,400 *to* 1,500	24,000
1,500 *to* 2,000	30,000
2,000 *to* 2,500	34,000

Source: *Energy Star.*

Chapter 6

Water Heating and Water Saving

Water is a key resource in your home. And you pay twice for most of the water you use. That is because you pay one bill for the water itself and another bill to heat that water—every time you wash your hands, take a shower, or run an appliance that uses hot water. An average family spends between 10 and 25 percent of its utility bill on simply heating up water.

While most Americans worry about rising electricity, gas, and heating oil prices, water rates have also surged in the past dozen years. Reducing the amount of water you use will save your family money on two bills: the water bill and the energy bill.

Saving on Operating Costs

The first thing you can do to save money on heating water is to turn down th temperature on your water heater. It only takes a minute and leads to big, big savings.

Most water heaters are automatically programmed to heat wate 40 degrees. But in most homes, 120 degrees is more than enough. The on ex tion is dishwashers, which need extra-hot water to clean dishes. Luckily, dish hers ve been made with their own internal heating systems si e the 1990s. This osts th temperature to 140 degrees while your dishwasher wo so you can sa y turn down the thermostat on your water heater. The ch ge al revents yo rom scalding yourself on extra-hot water and slows mine l buildup d corrosio in your pipes and water heater.

When you leave for vacation ummer, turn your wate eater temperature down even more. Gas water heate temperature k bs often ave a "Vacation" setting that keeps the pilot light on do eat th water. r you can turn the gas water heater completely off—just make sure you kn w how to safely relight the pilot light. Electric water heaters are wired to their ow reaker, so an easy way to keep your electric water heater off while ou're gon to turn off the breaker—just be sure to leave yourself a reminder to tu breaker back on when you return!

Insulating the Hot Water Tank

Insulation is very important to your water heater's efficiency. If your water heater has a tank, it will be rated with an R-value, just as regular insulation that goes into your walls is rated. The R-value should be at least R-24. If it is not, your tank can benefit from additional insulation. Sometimes, this can reduce the standby heat losses by 25 to 45 percent. If you don't know the R-value of your water heater's tank, just touch it. If it feels warm, it needs more insulation.

It is simple to add insulation to an electric storage water heater. You can find insulation jackets or blankets that are precut to fit your water heater's tank. They cost between $10 and $20, and you should choose one with an insulating value of at least R-8. An insulation blanket isn't necessary if you have a newer hot water heater that's factory insulated with R or better. The manufacturer's label will tell you how much insulation your w r heater contains. Sometimes adding a blanket to a new water heater can yo he warranty, so read the label on your water heater.

Adding insulation to the tan of a ga r oil-powered storage water heater is more difficult. It is best t h a HVAC contractor add insulation to these systems.

Storage ater Heater

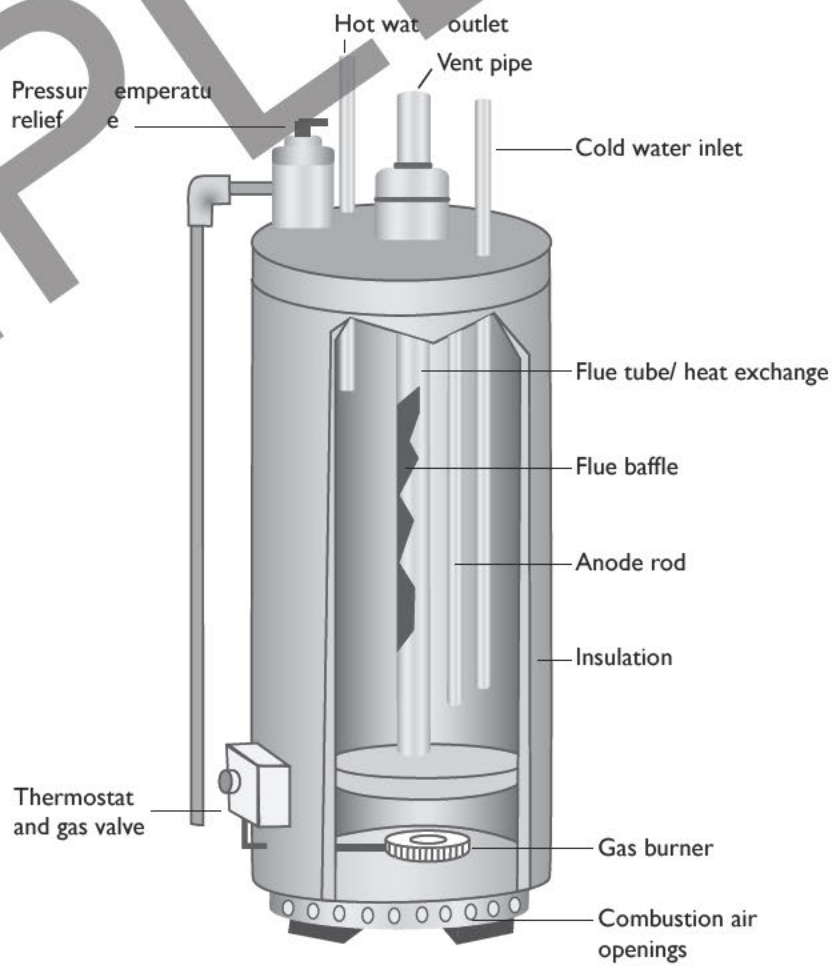

Insulate Water Pipes

Pipes should be well insulated, especially at the point where they connect with the water heater. Insulated pipes can reduce heat loss and raise your water temperature between 2 and 4 degrees, compared with uninsulated pipes. This means you can set the thermostat on your water heater 2 degrees lower but the water will be the same temperature when you turn on the faucet as it was before you adjusted the thermostat. Good insulation also helps pipes deliver hot water more quickly, so you don't have to wait as long for hot water when you turn on a faucet or shower. That conserves water—and saves you money on your water bill.

All hot water pipes that you can reach should be insulated, especially if they are within 3 feet of the water heater itself. Insulating cold-water pipes within 3 feet of the water heater is usually a good idea, too.

On gas water heaters, insulation should be kept at least 6 inches away from the flue, for safety reasons. If the pipes are within 8 inches of the flue, the safest choice is to use fiberglass pipe-wrap that is at least 1 inch thick and without a facing. Use either wire or aluminum foil tape to secure it to the pipe.

Repair Leaks Immediately

A leak of one drip per second can cost $1 per month, and repairing leaks in fixtures, faucets, and showerheads will reap instant rewards. If the leak is coming from your water heater's tank, though, it is likely you need [illegible] irely new water heater.

Make sure to check every leaky place in the h[illegible]se, including pip[illegible] hose couplings, and even your toilet. A leaky toilet can w[illegible]te [illegible]re than 52,00[illegible] gallons of water a year.

Install Heat Traps

Heat traps save energy by pre[illegible]nting heat loss through [illegible] inlet and outlet pipes of a storage water heater tank. [illegible]he heat traps [illegible] roughly [illegible]30, but their installation usually costs more. Installing h[illegible] tr[illegible] quires s[illegible]dering [illegible] pipe joint, so it is best done when you have the system installed or when yo[illegible] already have a technician out to work on your water heater. The addition can save y[illegible] between $15 and $30 on your water heating bill, and many new wate[illegible] heaters c[illegible]e with a heat trap already installed.

Install a Timer

You can save an additional 5 to 12 percent on your energy bill by installing a timer that turns off the water heater at night or during your utility's peak demand times, when energy often costs more. It's possible to install one yourself. Timers cost $60 or more but pay for themselves in about a year.

Timers are most effective if you don't want to install a heat trap or insulate your hot water tank and pipes. Timers aren't as effective on gas water heater tanks because of their pilot lights.

Maintenance

Storage water heaters have an average [illegible] span of between 10 and 13 years, but that lifetime can be lengthened with [illegible]e right maintenance.

The single most overlooked [illegible]t of the water heater is the sacrificial anode, which is a metal rod inside the stor[illegible] tank. Ove[illegible]me, this rod begins to decay because of a chemical reaction inside yo[illegible] wat[illegible]ank. If it has decayed completely and there is no metal left, the chemical rea[illegible]n will attack the [illegible]nk itself, causing it to rust. Replacing t[illegible] anode every two to fi[illegible] years will m[illegible] your water heater last longer.

Twic[illegible] a year, yo[illegible]hould also check for s[illegible]nt in your tank and drain it. If you have [illegible]t do[illegible]his rec[illegible]tly, the whole tank might need to be flushed. To do that, turn off the wate[illegible]eater c[illegible]it breaker (i[illegible] electric system) or shut off the gas valve (in a gas syste[illegible] and drai[illegible]e wa[illegible] from the tank. Allow a few gallons of cold water to refill [illegible] the tank. Dra[illegible]n, and repeat until the water is clean. Check and replace th[illegible]ttom and top thermostats of the tank, too, and if you have an electric system [illegible]eck the heating elements regularly. For gas systems, ensure that the flame comes [illegible] whenever hot water is being used. If it does not, call to have the system serviced.

The [illegible]mperature/pressure relief valve should also be checked every year. This valve prevents the buildup of dangerous pressures or very hot water in the tank. To check this, place a pan under the water outlet and lift the lever to check the flow. Be careful—the water is very hot. If water drips from the pipe after operating the valve, trip it several times to get a better seal. If it continues to drip, the valve might need to be replaced.

Tankless water heaters usually have a life expectancy of more than 20 years. They can also have parts replaced to extend that life for several more years. The maintenance on a tankless water heater varies based on the make and model of the unit, so check the owner's manual for specific maintenance recommendations.

Water Use at Home

Because you use water throughout your home—in your kitchen, bathroom, yard, and countless other areas—there are many ways you can cut down on both your water heating bills and on your water bills.

In the Bathroom

Install low-flow showerheads. Choose one that flows at a rate of less than 2.5 gallons per minute. Some showerheads manufactured before 1992 flow at a

rate of 5.5 gallons per minute. Switching from these old showerheads to low-flow models can save you 3 gallons of water per minute—for every minute that the shower is in use.

To see if yours should be replaced, conduct a quick test. You will need a bucket that is marked in gallon increments. Place this bucket under the showerhead, and turn on the shower at the normal water pressure you use. Time how long it takes the water to reach the 1 gallon mark. If it is less than 20 seconds, you can benefit from a low-flow showerhead.

With regular showerheads, a family of four can use 700 gallons of water per week if each person takes a daily five-minute shower. That is enough water to supply one person with drinking water for three years. Using low-flow showerheads and faucets can cut their hot water use in half—saving 14,000 gallons of water per year, and saving all of the energy required to heat that water.

Low-Flow Showerhead

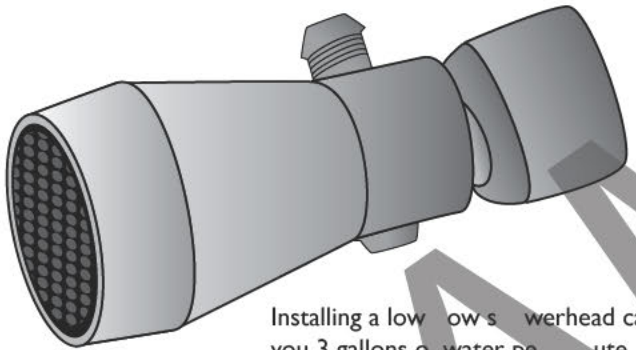

Installing a low-flow showerhead can save you 3 gallons of water per minute.

Know when to turn the water on—and when to keep it off. Your biggest savings will come from simply using less water. Take showers instead of baths, and take a shorter shower instead of a longer one. Turning off the water when you brush your teeth will save you 4 gallons per minute. Also turn off the water when shaving.

Install low-flow faucets. The maximum flow rate of a faucet is determined by the aerator, which is the screw-on tip on the faucet. New kitchen faucets typically come with aerators that limit their flow to 2.2 gallons per minute. New bathroom faucets have a lower flow of between half a gallon and 1.5 gallons per minute.

You can purchase a new aerator to lower the flow rate of your current faucets. To maximize efficiency, buy one with a flow rate of 1 gallon per minute or less.

When you buy a new one, unscrew the current aerator from your faucet and bring it to the store with you to ensure you purchase one that will fit your faucet.

Check the toilet. If your home was built before 1992 and you haven't replaced the toilets since then, you could benefit from installing high-efficiency models that use 1.6 gallons of water or less on each flush. This can save you up to 5 gallons of water per flush.

If you can't replace the toilet, consider putting a plastic bottle filled with water inside the tank of the toilet. This can save more than 11 gallons of water per day. Don't use bricks, though, as they can damage the tank.

Outside Your Home

Don't hose down the driveway. Use a broom or sweeper instead to clean your driveway, garage, or sidewalk.

Let grass grow longer. Longer grass reduces water lost to evaporation, and mowing too frequently will require more water to sustain your yard.

Pick plants carefully. Try to plant species native to your area, and focus on drought-resistant plants if you live in a warm climate. If maintained properly, native landscaping can use less than half of the water required by traditionally landscaped gardens.

Group plants that require the most water together so you can water them properly without over watering other species. Try to plant in the spring or fall when plants need less water.

Water carefully. Don't overwater your plants—it wastes water and harms your garden. If you have an automatic landscape irrigation system, adjust the controller at least once a month to account for changes in the weather. Install a rain shutoff device, soil moisture sensor, or humidity sensor to better control the irrigation system, too.

Water early or late in the day when temperatures are lower, and aim for the roots. This gets more water into the plant than watering just the leaves.

Check your sprinkler. Don't water the sidewalk or your neighbor's yard. Where possible, use a drip hose instead of a sprinkler, because sprinklers can lose water to evaporation. Don't leave sprinklers or hoses unattended. Outdoor faucets can flow at more than 264 gallons per hour. Install a timer to make sure your system shuts off properly.

Use a shutoff nozzle on your hose. This allows you to turn off the water while you wash your car, or as you walk around your yard watering plants.

Mulch. Using a layer of mulch around plants reduces water evaporation.

Forgo the fountains. Unless the water is recycled, don't install ornamental water features like fountains or birdbaths.

Other Tips

Make sure you are saving energy with your appliances, including your dishwasher, clothes washer, and dryer. For tips on using these appliances efficiently, see Chapter 9.

A New Water Heater?

If you are replacing a worn-out or old water heater, picking an efficient water heater is a surefire way to save on your energy bill. To choose the right water heater, you will have to decide what size system you need, what fuel source you will use, and what type of water heater design is right for your home. Energy Star–labeled water heaters assure the highest energy savings available for your replacement unit.

Storage Water Heaters

Storage water heaters are the most common type of water heaters in American homes. They are named for the large tank they use to store hot water. The tank can range in size from 20 gallons for a small system to 80 gallons for a large one.

When you turn on a hot water tap in your home, the storage water heater begins to work. It releases hot water from the top of the tank, and then replaces the water by drawing cold water into the bottom of the tank and heating it. This ensures the tank is always full.

Even when the hot water in a home isn't running, heat gradually escapes from the tank and more energy must be used to reheat the water. This is called standby heat loss. You can minimize it by purchasing a heavily insulated tank, but you cannot avoid it entirely with a storage water heater.

If you are purchasing an electric water heater, the most important thing to look for is the "energy factor" (EF). Choose one with an EF of 0.93 or greater. This means 93 percent of the energy used to heat the tank is translated into hot water and just 7 percent of that heat is lost. If you are purchasing a natural gas water heater, choose one with an EF of 0.67, which is the highest EF available for gas-powered storage water heaters. Also look for a sealed combustion model, which is installed so that the gases exhausted by the water heater are vented to the outdoors, for safety reasons.

Tankless Water Heaters

As their name suggests, tankless water heaters do not have a tank for storing hot water. Instead, they look like a small box.

When you turn on a hot water tap, cold water flows through a pipe and into the box of the water heater. There, either a gas burner or an electric element heats up the water in a constant stream. Unlike storage models, which can run out of hot water if you use a tankful of water, you won't run out of hot water with a tankless water heater because it continuously heats a steady stream of water. Most provide between 2 and 5 gallons of hot water per minute.

Because they don't have a tank, these models eliminate the standby energy losses that affect storage hot water heaters. This cuts the amount of energy your water heater uses by 10 to 15 percent, according to the American Council for an Energy-Efficient Economy.

Some households need more than one tankless heater, because in some homes even the largest gas-powered tankless models cannot supply enough hot water for all of the appliances, showers, and taps at the same time. They work particularly well in homes that already use water efficiently with things like low-flow faucets and showerheads.

If you are purchasing a tankless water heater, look for a gas-fired model with the Energy Star label. It should have an energy factor of 0.82. Some are also eligible for federal, state, or local tax incentives.

Tankless Water Heater

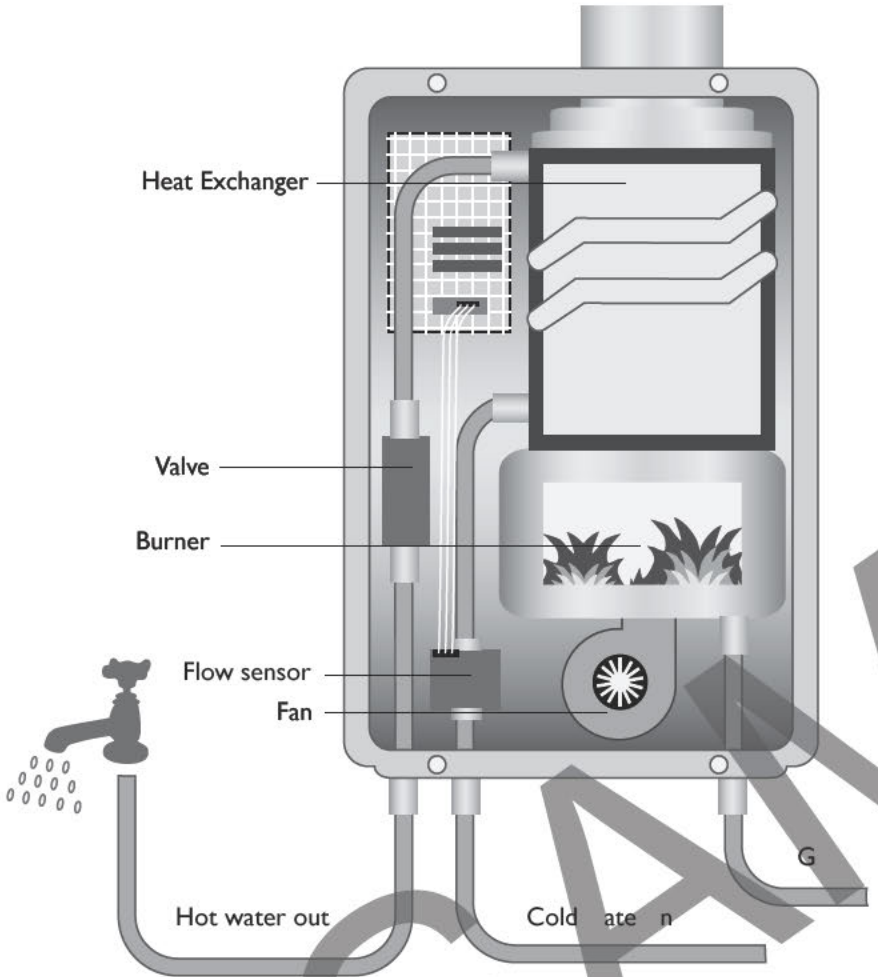

Air Leaks: What Are They?

It's easy to feel drafts around yo doors in the winter, when chilly air can flow through the doorjambs if th aven't been properly sealed. Many people think windows and doors are the ggest cause o r leaks in their home, because the drafts around them are so easy o notic ut that's wrong.

The attic, basement, and crawl sp es are usually r onsible for the biggest air leaks—and ing them can bring do your ene bill a lot.

Ai ks happ when outdoor air en your home through cracks and other pening Temper re differences, wind, appliance use, and even living habits can create a d erent p sure inside ur home than outside it, which helps the air to enter yo home.

Fin g the air leaks in your home and then sealing them will cut your heating and oling bill significantly. It will also improve the durability of your home, create a lthier environment, and make your rooms more comfortable.

How to Find Air Leaks

Sealing your home's air leaks can reduce your energy bill by 5 to 20 percent a year, according to the U.S. Department of Energy.

Look at the common air leak locations illustrated on the next page to see if air is flowing through these spaces in your home. If the areas are already caulked or weather-stripped, check to make sure there are no gaps or cracks in the installation and that the material is still in good condition.

Windows and doors are a good place to start. Look for daylight around the frame—if you see it, it means the door or window is leaking air. Try to rattle the door or window; movement means there could be an air leak. Also check storm windows to see if they fit and that they are not broken.

Consider doing a basic building pressurization test to check for leaks:

- *Start by closing all exterior doors, windows, and fireplace flues.*
- *Turn off all combustion appliances, such as gas-burning fireplaces, furnaces, and water heaters.*

Most Common Areas in Your Home for Leaks

1. Wall or window-mounted air conditioners
2. Window, door, and baseboard moldings
3. Wiring that runs through insulated floors, ceilings, and walls
4. Plumbing that runs through insulated floors, ceilings, and walls
5. In the basement, where the foundation meets the wood framing
6. Recessed lighting and fans in insulated ceilings
7. Fireplace dampers
8. Dropped ceilings above bathtubs and cabinets
9. Missing plaster
10. Electrical outlets
11. Attic hatch
12. Switch plates
13. Chimneys

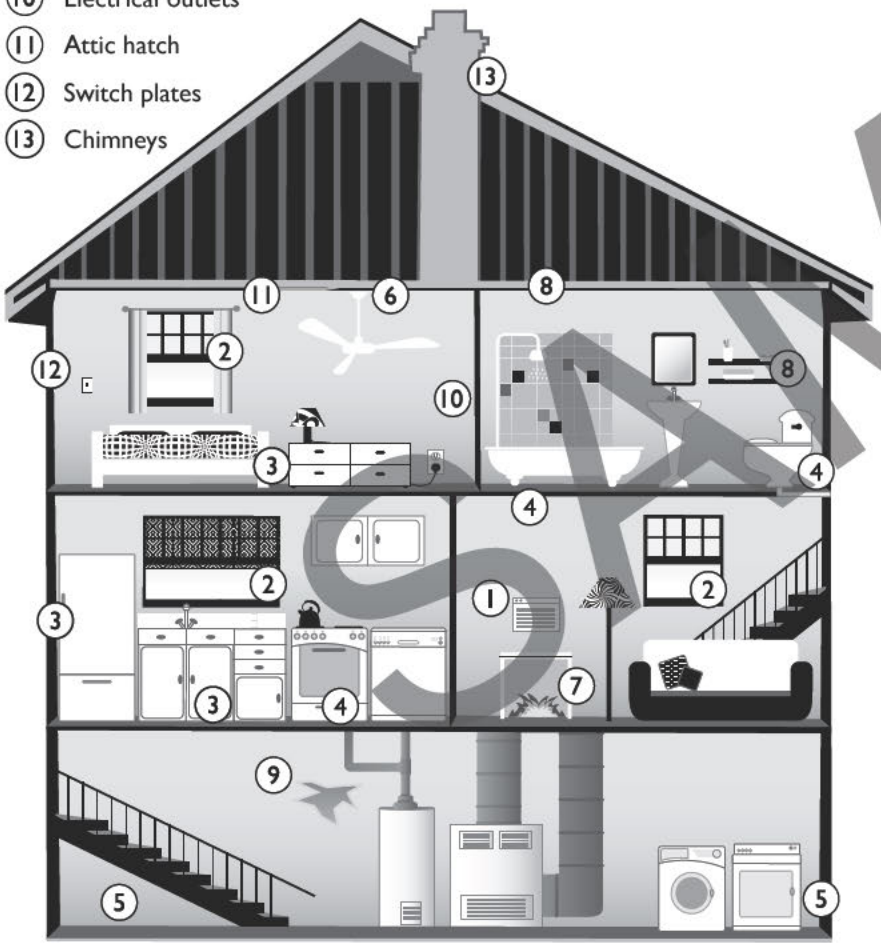

- *Then turn on all exhaust fans (usually located in the kitchen and bathroom) or use a large window fan to suck the air out of the rooms.*
- *This increases the amount of air coming into your home through cracks and leaks and makes them easier to detect. You can light an incense stick and use it to locate leaks; the moving air will cause the incense smoke to waver. Or put water on your hand, making it more sensitive to any cool air.*

Check the exterior of your h me where all the different building materials meet. These inclu :

- *All exterior corners.*
- *Where the siding meets the mney*
- *Where the foundation and the ior brick or siding meet.*
- *Where siding and window fram meet.*

C a Pro The Energy Audit

If you w a prof ional to luate the air leaks in your home, consider a professio l energy au Ch k with your local utility to see if they provide a basic ener audit. Some utili s do this for free. If yours does not, see if you can have a nergy audit done when you have a technician tune up your heating and cooling stem.

Th uditor will use equipment like a diagnostic blower door or infrared camera to detect air leaks and areas with inadequate insulation.

There are several other ways to find an auditor. They might be called a home performance contractor, an energy rater, or even an energy doctor—all are good options. In addition to the following organizations, you can check with your state's energy office to find a qualified contractor.

- *Energy Star (www.energystar.gov). This federal program partners with local utilities and municipalities. Find local programs or search for home energy raters through their website.*
- *Building Performance Institute (www.bpi.org). This group has certified contractors for more than 10 years, but is not available in every state.*
- *Weatherization Assistance Program (www.eere.energy.gov/weatherization). Depending on your income, you may qualify for a free energy audit as well as energy-efficiency home improvements through this federal program. To check, click on the "How Do I Apply For Weatherization?" tab on their website. Find state programs with the "State Activities" button.*
- *RESNET (Residential Energy Services Network; www.resnet.us). This nonprofit industry group certifies energy raters; the raters conduct the same types of tests that an auditor would do, but raters also assign your home a point score between 1 and 100 that compares its efficiency to that of other homes.*

The auditor will use several devices to test the efficiency of your home:

- *Blower door. This is a fan with several speeds that the auditor mounts to an exterior door frame. The auditor uses the fan to pressurize and depressurize your house to detect air leaks.*
- *Duct blower. This fan attaches to your duct system to measure the amount of air it leaks.*
- *Manometer. This small instrument measures the pressure differences between two parts of your home.*
- *Flow hood. This device measures the amount of air flowing through a register.*
- *Infrared camera. The auditor can use either a still or video infrared camera to find heat variations that reveal heat or air leaks.*

How to Fix Air Leaks

There are two main materials used to seal air leaks: caulk and weather-stripping.

When to Caulk

Caulk is flexible, and it is best used in cracks, gaps, or joints that are less than ¼-inch wide. You can use caulk throughout the home, including around windows and door frames. Besides sealing air leaks, caulk can also prevent water damag when applied around faucets, water pipes, bathtubs, and other plumbing fixtures.

Most caulk comes in disposable cartridges that fit into a half-barrel ca king g — try to purchase one with an automatic release, if pos Some caulking rtridges are already pressurized and do not require caulking ns. smaller jobs, ok for squeeze tubes and aerosol cans.

Before applying caulk, remove any ol lk or paint re due w a pu knife, stiff brush, or solvent. Try to apply w caulk during dry er when the outdoor temperature is above 45 deg s.

The warm temperature helps caul prope If yo pply caulk during a time of high humidity or rain, the cracks may be swelled with moisture and prevent the caulk from functioning properly.

How to Use a Caulk Gun

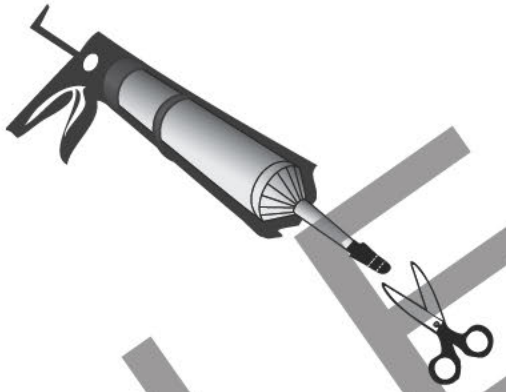

Step 1: Cutting the nozzle. Embossed markings are located on each tapered caulk cartridge nozzle that correspond to the size of the bead that can be dispensed. By cutting the nozzle at different measurements, you can form a caulking bead to match your joint size. It's easy—just cut the nozzle at a 45-degree angle, and place the cart ge in a caulking gun.

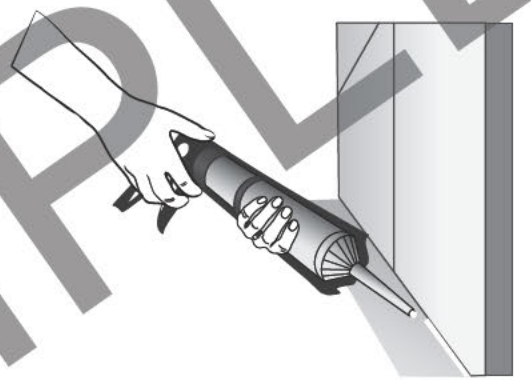

Step 2: Applying a bead of caulk. As you apply the sealant, hold the caulking gun at a 45 degrees angle to the joint being filled. Orient the nozzle opening so that it forces sealant into the joint surfaces. As you finish applying each bead of sealant, relieve the pressure inside the tube by releasing the trigger and pulling back on the rod to stop the flow of caulk. (Releasing the trigger alone will not stop the caulk from flowing out of the nozzle.) Apply only about 2 to 3 feet of caulk bead at a time so that you will have enough time to get it "tooled" before it begins to harden.

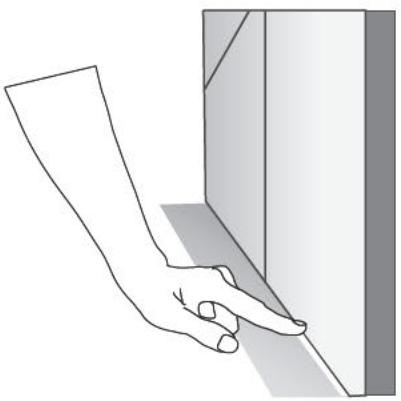

Step 3: Tooling. "Tooling" the bead ensures good adhesion and a good look. Tooling is the process of gliding over the entire length of the applied bead of caulk to smooth it out and further force the caulk into the area. Tooling can be done with a finger covered with a latex glove, wetted with some water or solvent, or just bare, depending on the caulk used.

There are many types of caulk, with varying benefits

Type of Caulk	Recommended Use	Cleanup	Shrinkage	Adhesion
Silicone (household)	Seals joints between kitchen and bath fixtures and tile. Flexible. Can form adhesive for tiles and metal fixtures.	Use dry cloth immediately	Little or none	Good to excellent
Silicone (construction)	Seals dissimilar building materials to each other, including wood, stone, metal, and brick.	Use dry cloth immediately	Little or none	Good to excellent
Polyurethane, expandable spray foam	Expands when curing; good for larger cracks indoors or outdoors. Must be painted if used outdoors.	Use a solvent such as lacquer thinner	None; it expands to fill large, irregular-shaped gaps	Good to excellent
Water-based foam sealant (light)	Used around window and door frames in new construction; fills small cracks.	Use water	None; expands only 25%	Good to excellent
Butyl rubber	Seals dissimilar materials like glass, metal, plastic, wood, and concrete. Durable for 10 years or more.	Use mineral spirits	From 5% to %; may requ two pplicatio	G d
Latex	Seals joints ar nd tub and sho er. Fills cracks tile, plaster, glass, d plastic. Seams can be smoothed with moist finger. Lasts 2 to 10 years.	se water	% to 1	Good to excellent
Oil, or resin-based	Seals exterior seams and joints on building materials. Limited durability of 1–4 years. Should be painted.	Use mineral spirits	From 10% to 20%	Good

Source: *U.S. Department of Energy, Office of Energy Efficiency and Renewable Energy.*

Weather-stripping

Pressure-sensitive adhesive-backed foam is the easiest weatherstripping to apply, and it is quite inexpensive. Available in both rubber and plastic, adhesive-backed foam comes in rolls of varying lengths and thicknesses. When compressed by a door or window, the foam seals out the air. As an added benefit, these strips also provide a cushioning effect that silences slamming. Though not permanent, this type of weather-st ping can last from one to three years.

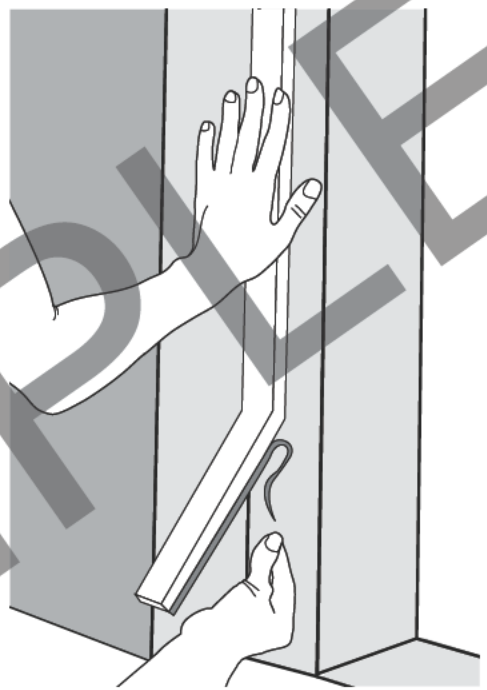

Step 1: Use detergent and water to clean the surface where weather-stripping is to be attached. If pressure-sensitive weather-stri g had been previously talled, use petroleum jelly to remove any old adhesive. Then let dry completely.

Step 2: Use scissors to cut a strip to fit, but don't remove the backing paper yet.

Step 3: Starting at one end, slowly peel the paper backing as you push the sticky foam strips into place. If the backing proves stubborn to remove at the beginning, stretch the foam until the seal between the backing and the foam breaks.

When to Use Weather-stripping

Weather-stripping is ideal for sealing air leaks around movable things like windows and doors. It comes in many sizes, thicknesses, and styles.

Choose your weather-stripping based on the specific place you want to install it. You can use more than one type of weatherstripping to seal an irregular-shaped area, too. Just make sure your choice will withstand the friction, weather, temperature changes, and general wear and tear it will endure in the space where you plan to install it.

Weather-stripping should be applied to clean, dry surfaces when the temperature is above 20°F. Measure the area you want to weather-strip before cutting the material, and apply the weather-stripping snugly against both surfaces. It should compress when the door or window is shut.

When weather-stripping a door, apply one continuous strip along each side of the doorjamb. It should run the entire length of the doorjamb and meet tightly at the corners. The right thickness of weatherstripping will press tightly between the door and the doorjamb when you close the door, but will not make it difficult to shut.

When weather-stripping a window, apply the weather-stripping between the sash and the frame. The window should open and close normally.

Sealing Ducts

Forced-air heating and cooling systems use ducts to move the warmed or cooled air through the floors, ceilings, and walls of your home. These ducts are frequently made of sheet metal or fiberglass—but they are rarely airtight. In an average house, about 20 percent of the air that flows through the ducts is lost through leaks, holes, and poor connections. That means higher utility bills for you.

Studies indicate that duct leakage can account for as much as 25 percent of total house energy loss, and in many cases it has a greater impact on energy use than air infiltration through the building shell. Duct leakage can prevent heating and cooling systems from doing their job properly, resulting in hot or cold rooms, and humidity problems. Worse yet, duct leaks can create air-quality problems by pulling pollutant and irritants directly into the house.

Indications that your ducts aren't properly sealed:

- *Your utility bills are high in summer and winter.*
- *Some rooms are difficult to heat and to cool.*
- *Some rooms are stuffy and never feel comfortable.*
- *Your ducts run through an attic, crawl space, or garag that ot heated or c d.*
- *You find tangled or kinked flexible ducts in your syste*

One of the biggest problems th twork is he ducts ru hrough unconditioned and unheated aces, like an attic, craw space, or garage. So the air you heat and cool is bein piped through areas that e either too hot or too cold, affecting the temperatu of the yo ducts. me minor duct repairs can be done yourself. To seal lea in ducts, use stic sealant. If your duct is in an unconditioned space, it should be sealed and in lated by a professional.

Keep in mind that insulating these du will e other effects. If you insulate ducts that run through a basement, the basement will become colder because it is no longer warmed by air that leaks from the ductwork. Protect water pipes and drains nearby from the reduced heat by insulating them with electrical heating tape.

Can the House Be Sealed Too Tightly?

Some people worry about sealing their home too tightly, but that's unlikely in many older homes. Some amount of fresh air is needed to keep good indoor air quality, but relying on air leaks to provide ventilation is unwise because they are unpredictable and inefficient.

Ventilation

Bringing fresh air into your home redu es the amount of indoor air pollutants, lowers the moisture level, and helps t get rid of odors. In poorly ventilated homes, pollutants can build up and caus ealth problems. Poor ventilation can also cause extra moisture to build up d lead to mold growth and structural damage to your home.

To maintain the proper amoun f ntilation, the American Society of Heating, Refrigeratin and Air-Conditioning Engineers sug s a home's living area be ventilated at rate of 0.35 air chang er hou r 15 cubic feet of air per minute per person, wh ever is greater.

There ar hree b ways to ventilate your home.

Natural v ntilation. T ter efers to the uncontrolled movement of air through crack nd small holes home—the same ones you want to seal to make your h e more energy efficient. Natural ventilation used to be the most common way getting fresh air into a home, but it's no longer the best strategy. It is unpredictable a uncontrollable, and it is unlikely to be uniform across all parts of a home.

Whol house ventilation. With one or more fans and duct systems piping fresh air into the house and pushing stale air away from it, whole-house ventilation systems make the air flow through your home at a uniform rate. There are four basic types of whole-house systems: exhaust ventilation systems, supply ventilation systems, balanced ventilation systems, and energy-recovery ventilation systems. Unfortunately, installing a whole-house ventilation system is rarely feasible in an existing home.

Spot ventilation. Using small exhaust fans, like the one above your oven in the kitchen or the one in your bathroom ceiling, is called spot ventilation. It increases the effectiveness of other ventilation methods, including natural and whole-house systems.

To improve the ventilation in your home:

- *Open windows.*
- *Use portable house fans.*
- *Install supply-only ventilation systems, which draw clean air from the outdoors into your home.*
- *Use exhaust ventilation, which operates a fan to push stale air out.*
- *Use a stand-alone dehumidifier. On a humid day in a hot climate, an air conditioner alone won't be enough to remove moisture from the air.*

Choose weather-stripping based on where it will be installed

Type of Weather-stripping	Recommended Use	Cost	Pros	Cons
Tension seal: a self-stick plastic folded in a V-shape or a strip of metal shaped to bridge a gap.	Inside the track of double-hung windows or sliding windows; along the top and sides of a door	Moderate; varies depending on material	Durable. Invisible when in place and very effective. Vinyl is easy to install; metal matches look of older homes	Surfaces must be smooth and flat for vinyl; metals must be nailed in place every 3 inches. Can increase resistance when opening doors and windows.
Felt: plain or reinforced with a metal strip. Sold in rolls and then glued, stapled, or tacked into place.	Around a door or window; can be fitted into a door-jamb so the door presses against it	Low	Easy to install. Inexpensive.	w durability; least effective at preventing airflow. Not for use in areas with expos re to moisture.
Reinforced foam: closed-cell foam that attaches to wood or metal strips.	Door or window stops; top or bottom of window sash, bottom of a door	Moderate to low	The closed-c foam is an effective gainst d.	C be difficult to install; must be sawed, nailed, and painted. Visible.
Tape: nonporous, closed-cell foam, open-cell foam, or rubber.	Top and bottom of window sash; door frame; attic hatch; inoperable windows	Low	Easy to tall. Works ell en com essed. Inexpensi and can be nforced by stapling.	Durability varies with material used, but is not high. Visible.
Rolled or reinforced vinyl: pliable or rigid strip attached to wood or metal strip.	Door or window stops; top or bottom of window sash; bottom of a door	Moderate to low	sy to install. Comes in varying colors t educe visibility.	Visible.
Door sweep: metal with brush of plastic, vinyl, sponge, or felt.	Bottom of interior de of in-swinging door; tt of exterior side of ou wing ing door	Moder to high	Easy to install; many types adjust for uneven thresholds. Automatically retracting sweeps available to reduce drag on carpet.	Visible. Can drag on carpet. Automatic sweeps are more expensive.
Magnetic: works similarly to refrigerator gaskets.	Top and sides of doo double-hung windows d sliding w hanne	High	Very effective air sealer.	High cost.
Tubal rubber and vinyl: vinyl or sponge rubber tubes with a flange that can be stapled or tacked into place to press against a door or window to form a seal.	Around a door	Moderate to high	Effective air barrier.	Self-stick versions can be challenging to install.
Reinforced silicone: tubular gasket attached to a metal strip.	On a doorjamb or a window stop	Moderate to high	Seals well.	Installation can be complicated. Hacksaw required to cut metal.

Weather-stripping (continued)

Type of Weather-stripping	Recommended Use	Cost	Pros	Cons
Door shoe: aluminum face attachment with vinyl C-shaped insert to protect under the door.	Beneath a door	Moderate to high	On the exterior, can shed rain. Durable. Good for uneven openings.	Fairly expensive. Installation can be difficult.
Bulb threshold: vinyl and aluminum.	Door threshold	Moderate to high	Combination threshold an eather strip; available in different he ts.	W rs from foot traffic.
Frost brake threshold: metal on exterior, wood on interior, with door-bottom seam and vinyl threshold replacement.	Beneath a door	Moderate to high	Effective.	Modera difficult to install; involves repl g the threshold.
Fin seal: a pile weather strip with plastic Mylar fin centered in the pile.	For aluminum siding windows and sliding glass doors	Moderate to high	Very du ble.	Can be difficult to install.
Interlocking metal channels: enables sashes to engage one another when closed.	Around door perimeters	Moderate to high	ery good weather seal.	Requires professional installation; alignment is critical.
Reinforced silicone: tubular gasket attached to a metal strip.	On a doorjamb or a window stop	High	Seals well.	Installation can be complicated. Hacksaw required to cut metal.

Source: *U.S. Department of Energy, Office of Energy Efficiency nd Renewa nergy.*

Chapter 8

Insulation

Heating is one of the most expensive items on your home's energy bill. More than one-third of the money you spend on energy goes to heat up your home. That is a big investment, and there are several changes you can make to maximize that investment.

Adding insulation is one of the best ways to make those changes. In the winter, you pay to heat the air inside your home. In the summer, you pay to cool that air. But without a well-sealed home and the right amount of insulation, that air can escape to the outdoors. When that happens, it wastes your energy and your money.

In fact, poor insulation and air leaks are the biggest causes of wasted energy in most homes. To change this, you first have to find the air leaks in your home and fix them, as we discussed in Chapter 7. After you do that, adding insulation will help stop this waste of energy—and save money.

Airflow Through a Home

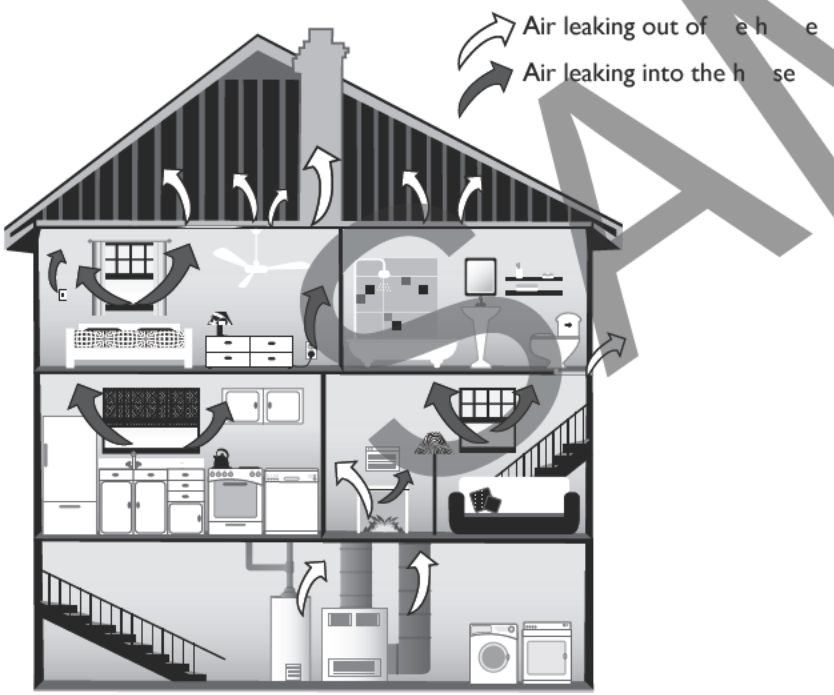

How Insulation Works

There are many different shapes and styles of insulation. They all have the same basic goal: to resist heat flow. The more resistance your insulation provides, the lower your heating and cooling costs will be.

Heat naturally flows from warm spaces to cool ones. Inside your home, the warm air flows through heated living spaces to unheated attics, garages, basements, and even the outdoors—unless there is enough insulation to resist this natural heat flow. The same thing happens in your ceilings, walls, and floors. Warm air can move through these parts of your home unless it meets resistance, such as insulation. The problem also happens in summer when you want to keep your home cool. In the summer, warm air from the outdoors tries to flow into the cool space inside your air-conditioned home.

When this outdoor air gets inside your home or when the inside air leaks out, your heating and cooling systems have to work extra hard to correct the problem. This means they use more energy to do their job, and that costs you money.

Insulating your home correctly increases its ability to resist this heat flow, which keeps the heat you pay to heat or cool inside your home, where you want it. Good insulation also keeps outdoor air outdoors. This is what decreases your energy bill.

Insulation has other benefits, too. It helps make your home more comfortable by keeping an even temperature throughout your whole house. In the winter, insulation keeps the walls, ceilings, and floors in your home warmer. In the summer, it keeps them cooler.

Together, proper sealing and insulation can save up to 20 percent on your heating and cooling bills, according to Energy Star.

How Much Is Enough?

Insulation's resistance to heat flow is measured in terms of its thermal resistance, which is written as an R-value. The higher the R-value, the more effective the insulation is.

The R-value your home needs depends on several things, including the cost of heating and cooling in your area and the local climate. Different R-values also are recommended for different areas of the home, such as the walls, attic, basement, and crawl space. Check to see if the insulation in your home meets the recommendation for your area. Some state and local codes have lower R-value requirements than the U.S. Department of Energy recommendations.

How Much Does Your House Have?

It is easy to check the R-value of insulation if you are buying it or having it installed. The Federal Trade Commission requires that all residential insulation products

have a label showing their R-value. The rule applies both to products purchased at a supply store and to those installed by professionals. Read the labels before installation or insist your contractor provide the information to you from each package of insulation. This ensures you end up with the right amount of insulation.

It is harder to determine the amount of insulation already in your home. One key indicator is the recommendations in place at the time your home was built. It's likely the builder followed the recommendations and local building codes in place at the time of construction. Many of these old standards are now considered inadequate, given rising energy prices.

Start in the Attic

How much insulation does your home have already? Looking at the floor of an unfinished attic id an easy way to begin because it should be insulated, and easy to see.

Identifying different types of insulation:

- *Loose fibers that are lightweight and pink, yellow, or white in color are probably loose fiberglass insulation.*
- *Batts that are lightweight and pink, yellow, or white in color are probably fiberglass batts.*
- *Loose fibers that are dense gray or nearly white are rock wool insulation.*
- *Loose fibers that are small, gray, and seem to be from newsprint, then it's cellulose.*
- *Lightweight granules are probably vermiculite or perlite. This type [illegible] lation can contain asbestos, and you should contact a licensed contractor to do [illegible] y rep irs.*
- *If the insulation is dirty or degraded, then warm dusty air is escaping fro [illegible] the ho [illegible] and is being filtered through the insulation—an ind [illegible] n that air sealing [illegible] needed under the existing insulation.*

Look underneath your floors. Look at the under [illegible] de of any [illegible] over a ga [illegible] e, basement, crawl space, or other unhe [illegible] ea. Measure [illegible] thick [illegible] ss of [illegible] insulation there. It's most likely fiberglass b [illegible] and you can multiply [illegible] ickness in inches by 3.2 to find its R-value.

Look at your ductwork. [illegible] he d [illegible] your [illegible] ting a [illegible] air-conditioning system run through unheated or uncooled spaces like attic or crawl spaces, then the ducts should be insulated. Return air ducts, which are locat [illegible] inside the heated portion of the house, don't need to be insulated, but they still [illegible] uld be properly sealed. Seal all the seams and joints with mastic duct seala [illegible] ble at hardware stores, and then cover with duct insulation if necessary.

Look at your pipes. They should be insulated if they run through unheated or uncooled spaces like the attic or crawl spaces.

Walls are harder to check. To determine whether your exterior walls are insulated, you can turn off power to an electrical outlet and then remove the cover plate from around the outlet. Shine a flashlight into the crack around the outlet box—you should be able to see whether or not the wall has insulation inside it. Do this on all levels of the house, and in new and old parts of the house. If you don't want to remove an outlet cover, one alternative is to remove and replace a small section of exterior siding.

You might need more insulation if:

- *Your home is older and hasn't h [illegible] any insulation added. Only 20 percent of homes built before 1980 are well i [illegible] ated, according to the U.S. Department of Energy.*
- *Your home is too cold in [illegible] winter or to [illegible] t in the summer. Adding insulation will even out the temperature an [illegible] increas [illegible] ur comfort.*
- *You build a new home, or an a [illegible] n, or install new siding or roofing.*
- *Your en [illegible] y bill is high.*
- *You hear e [illegible] essive noise from outsid [illegible] ns [illegible] on can muffle sounds.*
- *Th [illegible] ps of w [illegible] s show signs of condensation or discoloration.*

Loca on, Lo ati n, Location

Th [illegible] e are several areas you should focus on insulating: the attic, basement, crawl space, [illegible] d walls. These tend to be areas where the biggest air leaks in your home occur—and y [illegible] save more money by fixing the biggest leaks first.

Attics

Attics are the easiest place in a house to insulate, especially if you're adding insulation to an older home. Before deciding whether to do an insulating project yourself, keep safety in mind. If your home has vermiculite insulation, which contains asbestos, do not disturb it. Only qualified contractors certified to handle asbestos should do this work.

Keep in mind that stacking new insulation on top of the old affects the R-value of your existing insulation. Because of the compression, the R-value of the existing insulation will decrease slightly. You can compensate for this by adding about one extra inch of insulation if the old insulation is fiberglass, or an extra half inch if the existing insulation is rock wool or cellulose.

You can install batts and rolls yourself or hire a contractor to do this work. Make sure it is done right, though, because the installation is extremely important with this insulation. When you add insulation to the insulation that is already in your home, use unfaced batts instead of ones with a metal or paper facing on one side. Before you add any additional insulation, look underneath the insulation for any obvious ceiling penetrations or cracks that might need to be sealed.

Check the insulation on your attic door, too. It should be insulated to the same level as the rest of the attic. The door or hatch should be weather-stripped as well. If not,

air will flow right through it. The door might seem small, but insulating and sealing it properly will lead to big savings.

Basement

Basements are notorious for water problems, mold, cold temperatures, and other uncomfortable conditions. Insulating the basement can help reduce energy costs, but the best way to do that is a controversial question.

There are two general ways to insulate your basement. One is to insulate the ceiling, which prevents heated or cooled air from the rest of your home from entering the basement, essentially keeping it at the same temperature as the outdoors. The second way is to insulate the walls of the basement but not its ceiling, which keeps it at the same temperature as the rest of your house.

Advantages of insulating the walls but not the ceiling include:

- *It requires less insulation in many cases.*
- *It's easier to properly seal the walls than the ceiling because the basement ceiling typically includes electrical wiring, plumbing, and ductwork, and air can leak around these wires and pipes easily.*

Disadvantages include:

- *Installation can be expensive for an existing building.*
- *Many types of exterior insulation are susceptible to insect infestati*
- *If the surrounding soil contains radon gas, the house will requir a m ation system beneath the basement floor. For more information on radon, t the S Environmental Protection Agency website (www.epa adon).*

Any insulation that could be damaged by moisture, cluding erglass bat and cellulose, should never be used to insulate a baseme If you w he basem nt to be finished for use as a living spa d an experien d pr siona help you select the right materials.

Crawl Spaces

The best way to insulate your crawl space depend on whether it is ventilated or unventilated.

Crawl spaces were traditionally ven event problems with moisture, and many building codes still require this. However, many builders now believe that an unventilated crawl space is the best option. There are two reasons for this. First, in the winter, vents make it difficult to keep crawl spaces warm. Second, in the summer, warm, moist outdoor air can come into the crawl space through the vents and increase moisture.

Insulating a ventilated crawl space:

- *Seal any and all holes in the floor above the crawl space.*
- *Insulate between the floor joists with rolled fiberglass. Install it tightly against the subfloor and seal all seams carefully. Make sure to support the insulation with mechanical fasteners so that it will not come loose.*
- *Cover the insulation with a house-wrap r face it with a vapor barrier. The orientation depends on the home's location o mate; in most of the United States a vapor barrier should face upward. But egions like the Gulf states and other regions with mild winters and hot summ , it should face downward.*
- *Install a polyethylene vapo tarder or an uivalent product over the dirt floor. Tape and seal all the seams caref*

Insulatin an unventilated awl space

If your crawl s e is unventilated, the b oach is to seal and insulate the walls the ce rath than the subfloor. In th case, the access door to the crawl space should be cated i de the home— ot in a wall on the outside of your house.

- *Revie plans for t type sulation with pest control and local building officials to en e your plans co with existing codes.*
- *Make sure any combustion furnaces or water heaters located in the space are sealed-combustion units with a powered-combustion system.*
- *Seal all air leaks through the exterior wall.*
- *tall rigid foam board or batt insulation to achieve complete insulation coverage. Insulate the band joist with batt insulation.*
- *Install a continuous termite shield between the band joist and masonry foundation wall.*
- *Install a supply outlet in the crawl space, and rely on the leakiness of the crawl space's floor to provide the return air path.*

Walls

When adding insulation to existing finished walls, loose-fill insulation (either cellulose or fiberglass) is the best choice. It can be added with minimal disturbance to the finished areas of your home.

In new construction, the options are more abundant. Wet spray insulation can be used in wall cavities before the wall is finished. In homes built with insulating concrete forms, however, structural insulated panels and concrete block insulation literally have the insulation built into their walls.

Types of Insulation

Insulation can be made from many materials and in several styles.

Rolls and batts (or blankets) are flexible and made from mineral fibers like fiberglass and rock wool. Batts made from mineral wool, plastic fibers, and natural fibers like cotton and wool are also available.

This is the most common and widely available type of insulation, and it usually costs less than other types. It comes in widths suited to the standard spacing of house studs or in continuous rolls that can be trimmed to fit a specific space.

Facing is an important factor in batts and rolls. The facing can act as an air or vapor barrier and be made from craft paper, foil, or vinyl. Flame-resistant facing is also available for batts intended to be installed in basements where the insulation will be left exposed. But if you are installing new batts or rolls on top of existing insulation, use unfaced batts.

If you want a contractor to install it, obtain written cost estimates from several contractors for the R-value you need and ask about air-sealing services. If you install the batts yourself, follow the instructions from the manufacturer and check local building and fire codes.

Loose-fill insulation is made up of small bits of fiber, foam, or another material. The material is typically blown into a space using special equipment, such as blowing hose, and the bits are small enough to conform to any cavity withou disturbing the structure or finish. It is a good choice for both enclosed spaces like walls, or open spaces like attics.

Loose-fill insulation settles over time. This is a particular problem in a tti ecause the insulation settles, it loses its R-value over time. Some materials are ore p ne to this problem than others. Cellulose settles more th rock wool or fib glass. S if you use cellulose, install 20 percent more of it in a at o make sure y u have the right amount of insulation after it settles.

To make sure the walls are tightl filled with ins tion— ich ll prevent settling—use roughly one 30-p d bag o cellulose o 5 ounds of fibe glass or rock wool for every three c ties you fill. (This recom endation is based on an 8-foot wall with 16-inch on-w ll center caviti nd 2x4 ch framing studs.)

Be wary of voids, gaps, and fluffi g Voids and gap appe if the insulation is not tightly packed or if the space is not completely filled luffing happens when insulation is installed to meet minimum thickness requi ments but not minimum weight requirements, which means the insula talled more loosely than it should be. This lets air pass more easily through the insulation and into the outdoors. Fluffing is more of a problem with fiberglass than with cellulose or rock wool.

Make sure to be safe whenever you are handling insulation. Protect yourself when installing insulation by wearing a quality respirator, protective eyewear, and clothing with long sleeves and long pants, to minimize your contact with the insulation. Be sure ducts are properly sealed before you install the insulation so that the ducts do not carry loose bits of the insulation into your living space, where it could be harmful.

Liquid foam insulation can be sprayed, injected, poured, or foamed into an existing or new wall. Because it can fill even the smallest spaces, the R-value of sprayed foam insulation is about twice as high as traditional batt insulation. As a result, this type of insulation costs more than traditional batt insulation, but because the foam forms a seal that acts as an barrier, you won't need to buy as much caulk or weather-stripping to pr e additional insulation.

Some types of liquid foam sulation in de:

- *Cementitious*
- *Phenolic*
- *Polyisocy urate*
- *P lyurethan*

To instal uid foa insulation, a ntractor combines the liquid foam insulation with a fo ing agen hen sp it into the hole you want to insulate. The foam harden ver time an orms to the shape of the space, sealing it tightly. In exi g buildings, a foam that expands slowly is sometimes used because it is signed to flow over any obstacles, such as pipes, before it expands and dries in ce. These are called slow-curing foams.

Inst g most types of liquid foam requires special equipment and certification, so find a certified contractor to do the work. After installation, the wall must be covered with a barrier such as drywall.

Rigid insulation or foam-board insulation is produced in a board-like shape that can insulate almost any part of your home, from the roof to the foundation. It's often used to insulate foundations and as an insulating wall sheathing. It is typically more expensive than fiber insulation.

Foam board insulation can add structural strength to your home and reduce heat flow through structural elements like wood and steel studs. Because there are so few paths for heat loss, it's often able to provide a high R-value in a limited space. The most common types of materials used in making foam board include polystyrene, polyisocyanurate (or polyiso), and polyurethane.

The foam board can be damaged by sunlight, though, so the foam is usually covered with a rubber or plastic membrane, or by a layer of asphalt and roofing felt if it is used on a roof.

Insects can also cause damage, because they can easily tunnel through the foam board. Their burrows reduce the R-value and the structural integrity of insulation. To prevent infestation some makers treat the foam board with an insecticide. Another solution is to install the foam board over the interior of basement walls rather than on the exterior, which is more common.

Insulation Recommended R-Value in the United States

Zone	Gas	Heat Pump	Fuel Oil	Electric Furnace	Attic	Cathedral Ceiling	Wall (A)	Floor	Crawl Space (B)	Slab Edge	Interior	Exterior
1	✓	✓	✓		R-49	R-38	R-18	R-25	R-19	R-8	R-11	R-10
1				✓	R-49	R-60	R-28	R-25	R-19	R-8	R-19	R-15
2	✓	✓	✓		R-49	R-38	R-18	R-25	R-1	R-8	R-11	R-10
2				✓	R-49	R-38	R-22	R-25	R-19	R-8	R-19	R-15
3	✓	✓	✓	✓	R-49	R-38	R-18	R-25	19	R-8	R-11	R-10
4	✓	✓	✓		R-38	R-38	R-13	R-13	R-	R-4	R-11	R-4
4				✓	R-49	R-38	R-18	R-25	R-19	R-8	R-11	R-10
5	✓				R-38	R-30	R-13	R-11	R-13	R-4	R-11	R-4
5		✓	✓		R-38	R-38	R 3	R 3	R-19	R-4	R-11	R-4
5				✓	R-49	R-38	R-	R-2	R	R-8	R-11	R-10
6	✓				R-22	R-22	1	R-11	R-11	(C)	R-11	R-4
6		✓	✓		R-38	R-30	R-13	R-11	R-13	R-4	R-11	R-4
6				✓	R-49	R-38	R-18	R-25	R-19	R-8	R-11	R-10

Source: *U.S. Department of Energy, Office of Energy Efficiency and Renewabl gy (http://energy.gov/energysaver/articles/tips-insulation).*

These recommendations are cost-effective levels o ns ion based on t best available information on local fuel and materials co s and ther condi ns. Consequently, the levels may differ from current loca uilding co In additi the apparent fragmentation of the mmendations an ar ct o se data and should not be considere bsolute minimum req ents.

(A) R-18, R-22, and R-28 e rior wall systems can be ieved by either cavity insulation or cavity insulatio with i ng s thing r 2x4-inch walls, use either 3½-inche thick R-15 or 3½-inche thick 3 fiberglass insulation with insulating sheathing. For 2x6-inch walls, use eith 5½-inch thick R-21 or 6¼-inch thick R-19 fiberglass insulatio

(B) Insulate crawl space walls only if the crawl space is dry all year, the floor above is not insulated, and all ventilation to the crawl space is blocked. A vapor retarder (e.g., 4- or 6-mil polyethylene film) should be installed on the ground to reduce moisture migration into the crawl space.

(C) No slab edge insulation is recommended.

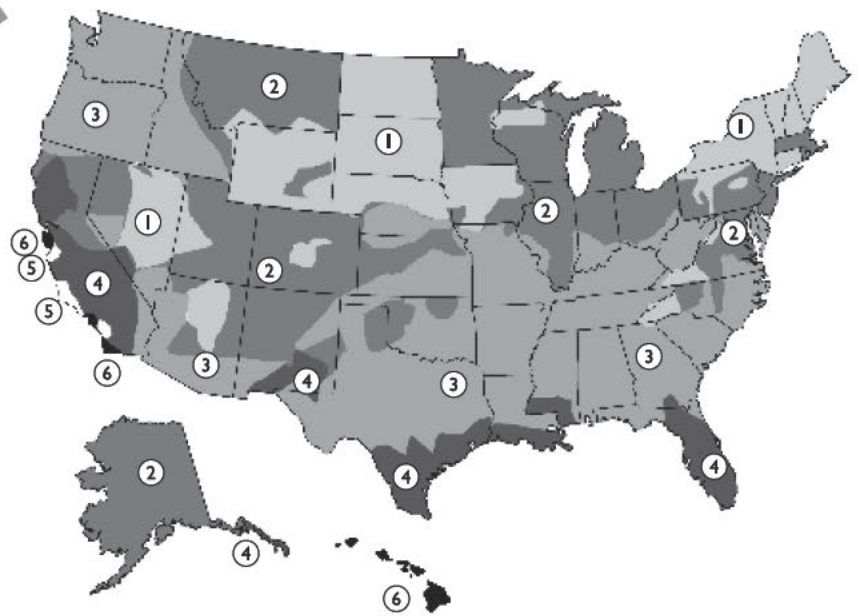

Various Types of Insulation

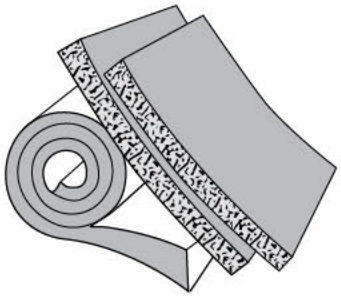

Rolls and batts or blankets are flexible and made from mineral fibers like fiberglass and rock wool. This is the most common and widely available type of insulation, and it usually costs less than other types.

Loose-fill insulation is made up of sma bits of fiber, foam, or another material. The material is typically blown into a space.

Liquid foam i ation can be sprayed, injected, poured, foamed into an existing or n ll This terial must be installed a certifie ontr or.

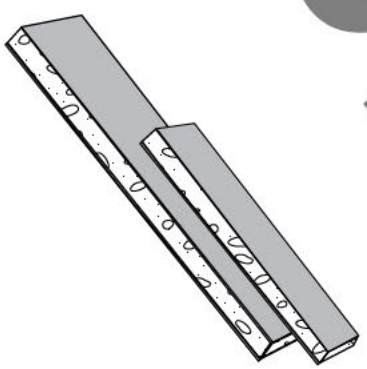

Rigid insulation or foam-board insulation is produced in a board-like shape that can insulate almost any part of your home.

Appliances

The average home uses $1,900 orth of energy every year—and more than 20 percent of that goes righ into your appliances, including your refrigerator, dishwasher, freezer, clothes her, and drye

Buyers shopping for a new appl e ually think the best buy is the one with the lowest sticker price. But that's no cessarily true

Every applian has two price tags: th tick price you pay at the store, and the p u pay i ility bills to operate i ou buy an appliance with a low sticker price, yo an end p paying more on utility bills if it isn't energy efficient. And that's going to t you m e money i he long run.

Op rating Cost

ow much you pay to operate an appliance depends on a few things. The first—a the most important—is how energy efficient the appliance is. Standards for effic cy have risen dramatically in recent years. In some cases, a new appliance will use just half of the energy that a five-year-old model does.

You also need to think of these costs over the long term. When you buy an appliance, you expect to use it for many years, often for more than a decade. The cost of operating it will add up over time. How frequently you use the appliance also affects your utility bill. The more frequently you switch it on, the greater the cost to operate.

Some appliances, like clothes washers and dishwashers, use two types of energy. They need electricity to power their motors and run the machine. But they also use hot water to do their job. That hot water costs more than the electricity does, but choosing a high-efficiency model will save you money on both bills.

When to Replace Your Appliances

Knowing when to replace your current appliances with high-efficiency ones can be tricky. Utility bills don't come with a receipt listing how much energy your fridge or your dishwasher uses. Some appliances are a good bet for replacement, though, like a refrigerator that is more than 15 years old. Others should simply be replaced with an energy-efficient model whenever your old one wears out.

How to Read an EnergyGuide Label

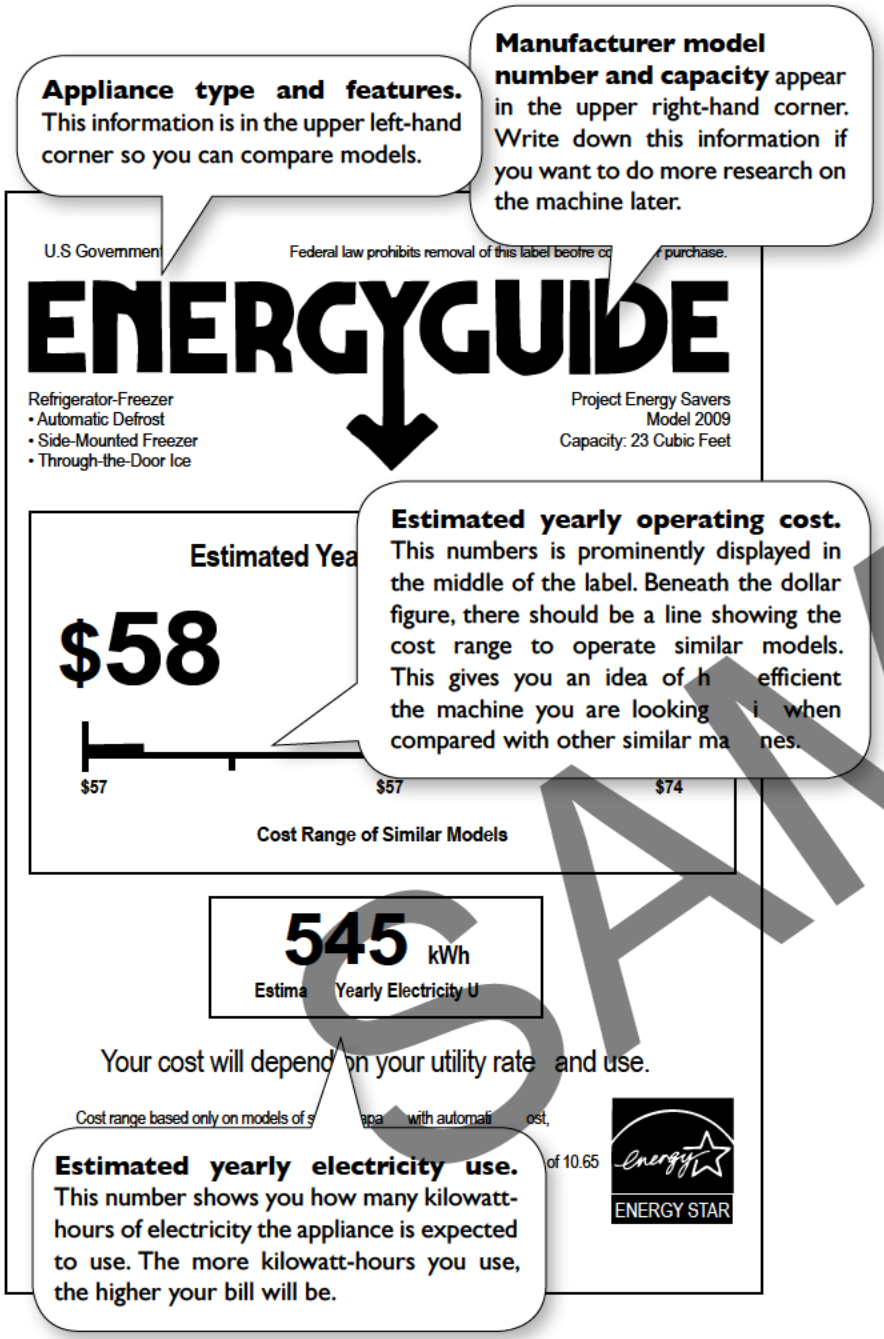

Know What to Look For

It's hard to tell from the outside how efficient an appliance is. The things that make it more energy efficient are on the inside—in the motors, compressors, pumps, valves, gaskets, seals, or electronic sensors. Two appliances can look exactly the same on the outside but be very different on the inside.

There are two things to look for wh buying a new appliance: the EnergyGuide label that tells you how much e gy the machine will use, and the Energy Star symbol that tells you it is high efficient.

Always choose appliances r d by E gy Star. These meet energy-efficiency standards far more strict than minimums required by law. That increased efficiency is what leads to increase avings.

Before you go the store, find out if E rgy r certifies the type of appliance you n ergy S rates many appliance ncluding clothes washers, dishwashers, refrigera s, free s, room air co ditioners, and dehumidifiers. But it does not certify clo es drye r water ters.

You c till tell how m energy the appliance will use, though, by looking for the y w EnergyGuide label. All appliances must have this label, except stove ranges d ovens. It will show you an estimate of how much energy the appliance uses, how m h it will cost to operate, and how efficient it is compared with similar appliances.

Shopping Strategy

Before you go to the store, think about what features you need from the new appliance.

Measure the space where it will go to ensure you buy one that will fit. Check that you'll have room to open the door of a dishwasher, for example, or the lid of a clothes washer.

When you get to the store, look at more than one appliance. Examine different brands from different manufacturers and compare different models of the same brand. The efficiency of an appliance is the single factor that reduces your utility bills most—especially when you consider the 10 years or more you will be using it.

Refrigerators

Refrigerators are a big energy hog in your home. An average household spends 7 percent of their entire energy bill just powering the refrigerator, according to the U.S. Department of Energy.

New refrigerators and freezers are significantly more efficient than old models, even when those old models are in perfect operating condition.

Although the exact energy use depends on the type of refrigerator you own, refrigerators made before 1993 cost an average of $50 more per year to operate than new Energy Star–certified models. And it gets worse over time. Refrigerators manufactured before 1980 cost about $150 a year more to operate than new Energy Star models.

Various Combinations of Fridge Freezers

The least efficient models have the freezer on the bottom

Th mos ficient models have he freezer on the top

Not the most efficient freezer

Energy Used by Different Configurations of a 20-Cubic-Foot Refrigerator

Configuration	Annual Energy Bill (Assuming 10 cents per kilowatt-hour)
Freezer on top	$47.00
Freezer on side	$61.00
Freezer bottom	$55.00
Fre r on t with through-the-doo ice	$56.00
Free on side w th gh-the-door ice	$61.00

urce: *Energy Star.*

Energy Star refrigerators also:

- *Use high-efficiency compressors, improved insulation, and precise temperature and defrost mechanisms to improve energy efficiency.*
- *Use 15 percent less energy than required by current federal standards.*
- *Use 40 percent less energy than conventional refrigerators sold in 2001.*

What to Look For When You Buy

Shape. Models with a freezer on top are more efficient than those with refrigerators and freezers side by side, or those with a freezer on the bottom. While Energy Star certifies each of these configurations, it holds them to different standards. Side-by-side models are allowed to use 10 to 30 percent more energy than models with the freezer on top to be certified by the program. Features like through-the-door ice and automatic icemakers also add 10 to 25 percent to the operating cost.

Size. For most homes, a fridge under 25 cubic feet will meet all of your needs. Those larger than 25 cubic feet use significantly more energy—and raise your utility bill. In the unlikely event you need more refrigeration than a 25-cubic-foot fridge can provide, it's usually best to buy one large fridge instead of moving your old one

to your garage and using it as a backup. Or you can look for a compact fridge—Energy Star certifies these, too.

Keeping Operating Costs Down

Thermostats should be set between 36˚F and 38˚F for the refrigerator. Freezers should be kept at 0˚F.

Keep the fridge in a cool spot. If it's in sunlight or near the stove or dishwasher, which produce heat, it must work harder to keep cool.

Check your power-saver switch. Many refrigerators have small heaters to prevent moisture from condensing on the outer surfaces of items in the fridge. Look for an energy-saver switch or a power-saver switch to turn off this feature, which usually isn't needed.

Defrost regularly if you have a manual defrost or partial-automatic defrost model. Ice buildup on the coils makes the compressor work harder to keep the temperature cold. If you live in a hot and humid climate and don't use air-conditioning, you may need to defrost your fridge often.

Check door seals and gaskets. They should be airtight. To test, you can pu a slip of paper on the door seal strip and close it. If you can't pull the paper out easily, the seal is good.

Leave room behind the fridge. Don't push your fridge too se the wall behind it. It needs a few inches of air to circulate around the conden coi

Minimize the amount of time the door is n. Grab severa hings at once, and make sure to close it tightly behind you. S me r gerators also ve an alarm that will sound if the door is not closed tightly.

Don't put a second fridge i r garage f you garage ches 90 degrees in the summer, a fridg ill use 45 to 50 perce ore energy to operate there than it would in a 70 d ree room. That's a big inc ase in your bill.

Clean the condenser co If refrige or ha visible condenser coils, either under the refrigerator or on the back, perio ally clean them to remove lint, pet hair, and dust balls, which can reduce efficiency pecial coil cleaning brushes are available to make the job easier.

Clothes Washers

Using a high-efficiency clothes washer can make a big dent in your utility bills. Energy Star clothes washers cut utility bills by an average of $50 per year, and a typical clothes washer will last at least 11 years. This means you can save more than $550 during the life of the average washer, just by choosing an Energy Star model.

That is enough savings to buy a new clothes dryer or dishwasher—and have some money left over.

Energy Star clothes washers also save an average of 7,000 gallons of water a year. That is enough water to fill up three backyard swimming pools in its 11-year life span.

New Energy Sta Washing Machines

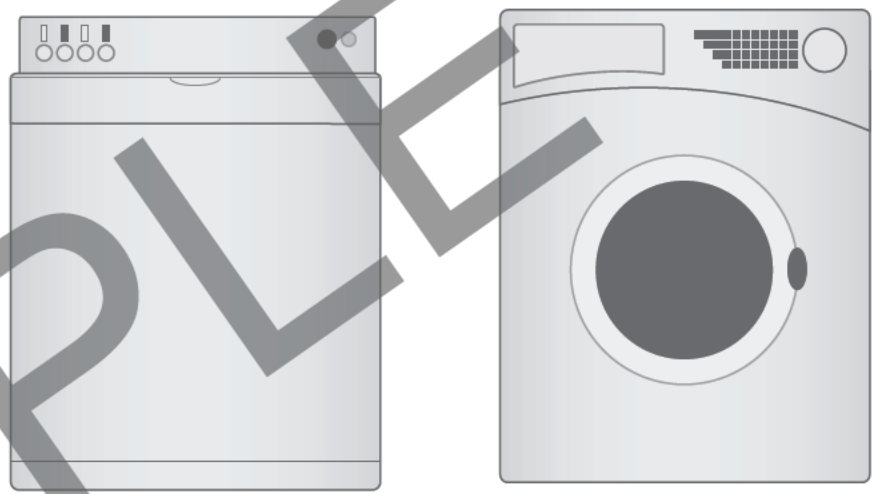

When You Buy

Ask for an Energy Star model and check the yellow EnergyGuide label. It will give you an estimate of how much the washer costs to operate per year, both with natural gas water heaters and with electric water heaters. The more energy it uses, the more it will cost to operate. Energy Star washers come in two designs: front-loading machines and redesigned top-loading models.

Pick a washer with a high modified energy factor (MEF) and a low water factor (WF). The MEF is a measure of the energy efficiency of the washer—the higher the number, the more efficient it is. The WF measures the water efficiency of the machine, calculated as the number of gallons of water it uses per cubic foot of capacity. The lower the WF, the more efficient its water use is. To qualify for Energy Star, a clothes washer must have a minimum MEF of 1.72 and a maximum WF of 8.0.

New Energy Star washers don't have a central agitator. Front-loading machines tumble clothes through a small amount of water, rather than rubbing them against an agitator in a tub full of water. Redesigned top-loading machines flip or spin clothes through a reduced stream of water. Both designs reduce the amount of hot water needed for the wash cycle, which reduces the amount of energy the

machine uses. These models also have a faster spin speed than other machines. This gets more water out of the clothes so they won't need as much time in the dryer.

These changes have other benefits, too. With no agitator, there is room for more clothes and it is easier to wash larger items like comforters. Machines without agitators are also gentler on your laundry, which helps your clothes last longer.

Conventional clothes washers use about 40 gallons of water in each wash cycle. Energy-efficient models with a large capacity use less than 25 gallons per cycle. Small and medium-sized machines can use less than 10 gallons. Many machines are now able to detect how much laundry you are doing and adjust the water level accordingly. If the machine you choose does not do this, make sure you can select lower water levels manually.

Save on Operating Costs

The energy a washing machine uses is almost directly proportional to the amount of hot water it uses—so the more hot water you can save, the more money you can save.

Wash with either warm or cold water, but remember that washing with cold will reduce your energy costs. About 90 percent of the energy consumed for washing clothes is for heating the water. Switching from hot to warm water can cut the energy use in half for a load of laundry. Cold water reduces that even more.

Only wash full loads of clothing. Wait until you have e ug lothes needing the same wash cycle to fill up the washer.

Don't use the sanitary cycle. This is an extr h etting available some models that increases energy use significantly.

Select the right water level. Reduce the wate evel wh y re doi g a small or medium load of laundry.

Use the high-speed sp . If your clothes washer s this option, use it. Or choose the extended spin. T feature he am nt of moisture in your clothes after they are washed, ng the time d en gy needed to dry them.

Leave the door to a front-loading mac ne open after use. Front-loading washers have airtight seals t make s no water leaks out while you use the machine. But when it's not in use, tha airtight seal traps moisture inside. Leave the door open for an hour or two to let the moisture evaporate. But be safe—keep children away from the machine so they do not climb in while the door is open.

Use high-efficiency detergent in a high-efficiency washer. Front-loading clothes washers are designed to be used with high-efficiency detergent. Regular detergent in these machines produces too many soapsuds, leading to bad performance and, over time, to mechanical problems.

Clothes Dryers

Different types of clothes dryers aren't that different when it comes to energy. Most use about the same amount of energy, even when you compare gas-powered ones to electric-powered ones. It does not make financial sense to replace an older dryer if it runs well, because newer models will not save much energy. Because of this, Energy Star does not rate clothes d ers.

If you are buying a new dryer, th is one thing to look for: an automatic shutoff. Dryers with this feature can how dry your laundry is and turn off automatically. You can also find models w "tumble ac ", which reverses the direction the dryer spins at several points in cycl his keeps your clothes from tangling and dries them about 10 percent fast

The real key saving energy on you lothes d r, though, is in operating it—and in knowing wh not to operate it.

Save on Opera ng Costs

Autom tic shutof If ur machine has a moisture sensor that automatically shu ff the machine w en the clothes are dry, use it. It saves energy and saves ar and tear on your clothes.

C an the lint filter. Removing lint after every load improves air circulation, whi increases the efficiency of your dryer.

Make sure your vent hose isn't clogged. Also make sure your outside dryer vent damper is closing completely and lint is not blocking the damper from closing. Check and clean it regularly.

Use a drying rack or hang your clothes outside to dry. Air drying helps your clothes last longer and doesn't use any energy.

Don't overload the dryer. One washer load is one dryer load. The clothes should tumble freely. But take care not to underload the dryer, which wastes energy.

Sort clothes by drying time. Wash and dry similar fabrics together, so that you run the dryer only as long as you need to.

Dishwashers

You can save $30 per year on utility bills by replacing a dishwasher made before 1994 with a new Energy Star–certified model. Energy Star dishwashers use 41 percent less energy than the minimum federal standards, and use less water than conventional models.

Energy Star only rates the energy efficiency of an appliance—not its efficiency

with water. Water use is a big factor in choosing a dishwasher, though. It does not appear on the EnergyGuide label, so ask the salesperson for the manufacturer's information on water use. Models rated by Energy Star also meet minimum water-efficiency standards.

Dishwashers rated by Energy Star use an average of 4 gallons of water per cycle, compared with 6 gallons used by a regular dishwasher, according to the program. That is one-third less water.

When You Buy

Choosing a dishwasher with high energy efficiency and low water use will decrease the amount you pay to operate the machine.

Start with the EnergyGuide label, which tells you how many kilowatt-hours a year the machine is expected to use. This estimate is based on washing 215 loads per year, though the amount your family uses it will likely be different. Choose a machine with an estimated use of less than 340 kilowatt-hours per year, which is 40 percent better than the minimum federal standard.

The EnergyGuide label also shows you how much water the machine uses. Som Energy Star models use half as much water as others, which can save you hundreds of gallons of water each year. Also see if your local utility offers rebates for the purchase of a high-efficiency model.

Look for features like light wash or energy-saving cycles, whic an used for dishes that are only slightly dirty. Some dishwashers are able sens his themselves. If the machine is marked "soil sensing," t means it can d ect ho dirty the dishes are and automatically adjust the wa r Not all high- ciency models have this feature.

The machine should also have several ptions for dry g. Cho o ith an air-dry or no-heat drying option. M t dish ashers use ctric heating element to dry dishes, which account or 7 percent of the ma ne's energy use. You can eliminate that by using a no eat setting Af the las nse, a machine on this setting will use fans to blow m ough t dish sher to dry the dishes, instead of baking them dry with the electric heatin element.

Keep Operating Costs Down nd Sav Water

Scrape dishes instead of pre-rinsing them. You can use up to 20 gallons of water pre-rinsing dishes, according to Energy Star. Instead, just scrape off your dishes and put them in the dishwasher. Machines made in the past 10 years are built to handle this.

Wash only full loads. The dishwasher uses the same amount of water whether it is empty or full, so you save energy by simply waiting to run it when it is full. If it takes a day or two to fill the dishwasher, use the rinse-and-hold feature on newer models to prevent food from drying onto your dishes. It uses just 1 to 2 gallons of water—a fraction of the amount hand washing does.

Remember that washing dishes by hand uses more water than a dishwasher does. You can save 5 000 gallons of water per year and $40 in utility costs (not to mention 230 ho of time) by using a dishwasher instead of hand washing, according to Ener Star.

Use the energy-saving ptions on w h and dry cycles. Use the no-heat or air-dry feature. Use a light was when d es are not very dirty.

Turn down the temperatur f your wate heater. Most dishwashers sold in the U ted States since the l 0s includ uilt-in heaters to increase water temperature 140 degrees. This ext bo er means you can turn down your ter to 0 degrees and save on he energy bill.

Stov s and vens

Yo kitchen oven won t come in an Energy Star–rated model. But you can still ake a few small changes to reduce the amount of energy you use while operating y r oven cooktop—and make sure you are using these appliances efficiently.

Nat l gas is the preferred fuel to heat most homes, but you should choose between a natural gas cooktop and an electric one based on your preference, if you can. You do not use enough energy while cooking to make this choice based on efficiency alone.

If you are buying a new gas stove, choose one that does not have a standing pilot light. Standing pilot lights can double the amount of energy a cooktop or range uses. For electric cooktops, choose one with radiant elements or electric coils, which are the most efficient, according to the American Council for an Energy-Efficient Economy.

Self-cleaning models also are more energy efficient because they have more insulation. Using the self-cleaning feature more than once a month ends up using more energy than you save, though, because of the high temperatures the cycle uses. If your oven has a self-cleaning option, use it only after you finish baking and the oven is still warm. That takes advantage of the heat to jump-start the cycle.

A microwave is a good option to save energy while cooking. Although it can use a large amount of energy, it drastically reduces the cooking time for many meals, which can save you up to two-thirds of the energy you would use to prepare the same meal in a conventional oven. It also generates less heat in the kitchen when compared with a regular oven, decreasing your air-conditioning costs in the summer.

Save on Operating Costs

Choose the right pot or pan. Size is important. If you use an electric cooktop with 8-inch burners, using a 6-inch pot wastes more than 40 percent of the heat the burner produces. Pans should also have a flat bottom (not warped) to keep good contact with an electric burner.

Don't overcook. If you can heat up a small amount of food with a toaster oven or microwave, it will save energy. Don't heat up the entire oven unless you need to.

Use the right material. Pots and pans should be made of a highly conductive material that heats your food more quickly and results in a more evenly cooked meal. Copper-bottom pans heat more quickly than regular ones. For the oven, ceramic or glass pans are more efficient than metal—you can turn the temperature down by 25 degrees and the food will cook just as quickly. This is why some recipes call for one baking temperature with glass pans and a different temperature for metal ones.

Put a lid on it. Covered pots and pans heat up faster and hold heat better than uncovered ones.

Keep it clean. When your burner pans become blackened from heavy use, they can absorb a lot of heat and reduce the efficiency of the burner. They should stay shiny so the metal reflects heat up to the cookware.

Reduce cook times. Defrost frozen foods in the refrigerato[illegible]s [illegible]d of the microwave. Keep the oven closed while you cook and avoid peekin[illegible]s th[illegible]lets heat escape. If you are using an electric burner, turn off the heat just [illegible]efore food is cooked—the heat will continue to cook the [illegible]o. You can do the s[illegible]e with a conventional oven.

Plan ahead. Cook double portions of your meals [illegible] make it [illegible] conven[illegible]nt for you and to reduce your ener[illegible] you use th[illegible]elf [illegible]an featu[illegible]n your oven, plan to use it only after [illegible]u are finished baking s[illegible]thing to take advantage of the already warm oven.

Stay safe. If you have a gas [illegible] ways use t[illegible]vent[illegible]ion fan. Start it before cooking and let it run 10 to 20 minutes after you[illegible]e done to reduce humidity in your house and vent to the outdoors. Never—un[illegible]r any circumstances—use your oven as a way to heat a room. They [illegible]e not [illegible]igned for this purpose. Operating an oven with the door open is a safety hazard and it can release carbon monoxide into your home.

What to Do with Your Old Appliances

Once you've purchased a new energy-efficient appliance, you have to decide what to do with the old one. The best option is to recycle it. Check with your state or local utility company, as they often run recycling and donation programs for old refrigerators and other appliances. Also check with your local solid waste and trash haulers, as many of these businesses will pick up old appliances from their customers with notification.

It's important to make sure appliances are removed properly. Cooling equipment like refrigerators and freezers involv[illegible] refrigerants, and older models can contain PCBs or mercury. If it cann[illegible] be recycled, most municipalities will pick up an old refrigerator or freez[illegible] with their bulk trash pickup, as long as you call the city to arrange this [illegible] law, they must dispose of refrigerants, PCBs, and mercury properly.

Home Electronics

We use electronics in our homes every day. We watch TV, turn on the computer, and pick up the phone. The cost of operating these home electronics adds up quickly. The main reason these electronics use so much energy is not because they are large in size. It is because we own so many of them, and we use them so often.

Many of our electronics also continue to use electricity even when we think they are off, which adds an extra cost onto the energy bill. Each year, Americans spend more money powering home audio systems and DVD machines when they are off than when they are actually in use, according to the nonprofit Alliance to Save Energy.

Levels of Power

To understand how these costs add up, it's useful to know how these devices use electricity. In many cases, it's not as simple as being either on or off. Electronics now come with as many as four different power levels that vary the am nt of energy the machines use.

Most Common Energy Levels

Active mode. The appliance is on. For examp whe he TV is di aying pictures and sounds, or when the printer is printing.

Active standby. The applian for use, t n actually e. For example, when the DVD play is powered on but no aying a DVD or when a printer is on but not printing

Passive standby. The app ff or on s dby. t appears to be off but can be activated by a remote control, the machi is actually in passive standby mode. For example, when the television is off, bu an be turned on with a remote.

Off. The appliance is off. There is no on being performed, and it cannot be turned on with a remote.

Just how much energy an electronic device uses in each of these modes varies. The chart on the next page shows an average amount of power used in each mode by a variety of appliances, but this is just an average. If you have an older television, for example, it likely uses a lot more power.

How Much Power Different Types of Electronics Use

Device	Passive Standby or Off (watts)	Active Standby (ts)	Active (watts)	Average Annual Energy Use (kWh)
Home Entertainment				
Plasma TV (<40")	3	-	246	441
DVR/TiVo	37	37	37	363
Digital cable	26	2	26	239
Satellite cable	26	11	1	124
CRT TV 0")	1	-	73	123
LCD TV (<	3		70	77
ame co le	1	-	24	16
DVD p er	1	5	11	13
Hom Office				
De op computer		17	68	255
aptop computer	1	3	22	83
CRT monitor	2	3	70	82
CD monitor	1	2	27	70
C puter speakers	2	-	7	20
Modem	5	-	6	50
Wireless router	2	-	6	48
USB hub	1	-	3	18
Printer	2	3	9	15
Fax	4	4	4	26
Multifunction printer/scanner/ copier	6	9	15	55
Rechargeable Devices				
Power tool	4	-	34	37
Handheld vacuum	3	-	3	29
Cordless phone	2	3	5	26
Electric toothbrush	2	-	4	14
Shaver	1	-	1	11
MP3 player	1	-	1	6
Digital camera	0	-	2	3

Source: *ECOS Consulting, 2006: Final Field Research Report for the California Energy Commission and the American Council for an Energy-Efficient Economy.*

Home Office Equipment

The average home owner spends up to $175 each year powering computers and other electronics. You can lower that cost by choosing more efficient equipment, but according to the Rocky Mountain Institute, the biggest savings comes from changing the way you operate your electronics.

Desktop Computers

Desktop computers use more energy than laptops because of their larger size and the multiple pieces of equipment—including the monitor, keyboard, and CPU—that are included in the machine.

Desktops made before 1999 can use between 80 and 160 watts of electricity when they are on, and even new desktop machines can use anywhere between 25 and 110 watts. Machines that use the most power aren't necessarily faster. One type of 1,400-MHz processor uses 117 watts while a different 1,800-MHz processor uses only 63 watts, according to the Institute. If you are considering buying a new desktop, look for one with a feature called "speed-stepping" that shuts off or slows down power to the parts that aren't in use.

Monitors

The amount of energy a computer monitor uses depends on how [illegible] is made. An LCD (liquid crystal display) monitor uses an average of 57 percent [illegible] rgy than a CRT (cathode ray tube) monitor of equal size. LCD monitors also u[illegible] less [illegible]ergy in sleep mode, pulling just 2 watts of power compared with the 7 watts [illegible]awn by [illegible] CRT monitor, according to the Institute.

Laptops

Laptop computers are good if [illegible] ne[illegible] portable [illegible]ach [illegible]e and wa[illegible]o save energy. They use between 14 [illegible]d 25 watts at full pow[illegible] according to the Rocky Mountain Institute. This mea[illegible] you can save between 4[illegible]nd 100 watts of power simply by using a laptop inste[illegible] of a de[illegible]

Save on Operating Costs

- *Plug laptops into power strips. If y[illegible] leave th[illegible]harger plugged in, it will continue to draw power even if your laptop isn[illegible]cted to it. Instead, put it in a power strip and flip the switch off.*
- *Don't rely on screen savers. Some people believe these save energy, but that is wrong. Screen savers are only designed to protect the screens of old CRT monitors from burn-in. Instead of using one, just turn off the monitor if you will be away from the computer for more than 20 minutes. If you will be gone for two hours or more, turn off the entire computer.*

- *Don't be afraid to turn off the computer. Many people believe that computers operate better if left running than if they are turned off, but that is a misconception held over from the early days of computing. New computer components are rated for many more cycles of reliable operation than earlier models.*
- *Don't turn on everything at once. Make sure your computer doesn't turn on the printer or other external devices as part of its routine start-up cycle. Those should be turned on separately only when needed.*
- *Choose computers with sleep mo[illegible]—and use them. Sleep modes can save as much as 60 to 80 percent of energ[illegible]e.*
- *Only buy Energy Star co[illegible]uters. The prog[illegible] recently strengthened requirements for computers, and now f[illegible]tors in t[illegible] amount of energy the computer uses while running—not just whil[illegible] i[illegible] sleep mode. Buying only Energy Star office equipment can save you more [illegible]n $115 over the 1[illegible] span of your machines, the program [illegible]stimates.*

Pri t rs

As with m[illegible]nitors, t[illegible] style of pri[illegible] you pick will have a large effect on how much energy it [illegible]es. Look [illegible]an En[illegible]gy Star model.

La[illegible] printers are known for making higher-quality prints in less time, but they [illegible]e a lot more power than inkjet printers do. If you need high-quality printing, reduce y[illegible]r energy use by choosing a low-speed laser printer, which uses an average of 43 wa[illegible] compared to the 100 watts used by high-speed color laser printers. By contrast, **inkj[illegible] printers** use roughly 60 percent less energy, according to the Institute. An Energy Star low-speed inkjet printer can use 10 watts or less of electricity.

Save on Operating Costs

- *Use a control device. This shuts down the printer after it has been idle for a certain amount of time and turns it on again when the computer asks it to print a new document. Find these devices on www.EnergyStar.gov.*
- *Print on both sides of paper to reduce paper costs.*

Copy Machines

Copy machines can consume a great deal of energy. Low-speed copy machines—the type most often used in homes—use 115 watts of energy. That is twice as much energy as a desktop computer uses. Copiers more than eight years old can use even more—as much as 400 watts. For new machines, choose Energy Star models, which can use fewer than 60 watts in low-power modes.

Fax Machines

It's easier than ever to find a highly efficient fax machine. Models that use fewer than 10 watts are widely available today. Older ones draw well over 30 watts. If you are

in the market for a new fax machine, think about buying one that is a combination phone and fax. The combined machine uses only slightly more electricity than a telephone with an answering machine. Or look into purchasing a fax card for your printer or a fax modem for your computer, which can actually eliminate your need for a separate fax machine.

Combination Machines

All-in-one machines that can print, scan, fax, and copy are increasingly popular. Combining these tasks into one machine also saves a substantial amount of energy compared with operating separate machines for each task. The average multifunctional machine uses about 82 watts of power when on. Look for one certified by Energy Star as highly efficient.

Save on Operating Costs

As with many things in your house, the amount you pay to power your electronics depends in large part on how you use them, how often you use them, and what steps you take to cut down the amount of power they use when you aren't using them.

- *Turn them off. The easiest way to reduce the amount of power your electronics use is simply to turn them off when you aren't using them.*
- *Turn them on only when you need them. Get in the habit of turning on your computer, television and other electronics for only as long as you actually use [illegible] Do printing or copying in large batches and turn the machines off when you are [illegible]ne*
- *Don't leave a fax machine on 24 hours a day. Instead, ask people to ca[illegible]efore [illegible]y fax anything to you so you can turn the machine on [illegible]ly when it's necess[illegible]y*
- *Make sure they are really off. Most of the time, electr[illegible]ics c[illegible]inue to use po[illegible] even when they appear to be off. This power is used for [illegible]ngs like [illegible]tant on" fe[illegible]res or clock displays. The American Council for an Ener[illegible] Efficient [illegible]my estim[illegible]es the average family pays for 50[illegible] electricity to [illegible]ower [illegible]pliance[illegible] standby or sleep modes. To stop this [illegible]ste, unplug all applianc[illegible]m the wall or cut all the power to them.*
- *Use power strips. Plug you[illegible]ome offi[illegible] p[illegible]t inclu[illegible]g your computer, printer, and any other machines, int[illegible]g e power str[illegible] so yo[illegible] can switch it off and cut all power to these machines at once. That keeps [illegible]m from using energy even while they are off. It also protects them from power s[illegible]es. If one of your electronics must be left on, plug it into a separate [illegible]wer strip [illegible] you can switch the others off easily. Don't do this with a TV, because they u[illegible]y need to be reprogrammed after they are completely turned off.*

Televisions

In the last decade, technological advances have had major effects on the energy use of televisions. The transition from analog to digital televisions has led to the widespread replacement of CRT and rear projection (RP) televisions with flat-panel technologies, such as liquid crystal display (LCD) and plasma display panel (PDP).

No matter what kind of TV you have [illegible]e best way to save energy is simply to leave it off. Remember, it doesn't nee[illegible]o be on to record programs, and keeping the TV on when you aren't wat[illegible]g it wastes energy. If you buy a new TV, choose the most efficient one possible [illegible]ergy Star T[illegible] are on average 25 percent more efficient than conventional TVs [illegible]d th[illegible]ave energy in all usage modes (sleep, idle, and on).

At the store [illegible]ok for a TV with the E[illegible]rgy Star [illegible]el and a low active-mode power use This tells y[illegible] how much electricity [illegible] uses when it's on. LCD screens are [illegible]m[illegible]opula[illegible] and usually the most e[illegible]ergy efficient—but there are differences. Most are [illegible]acklit w[illegible] light-emittin[illegible] diodes (LEDs) either via an array of LEDs in the back[illegible] the pane[illegible]r alon[illegible] edge. Some use cold-cathode fluorescent lamps (CCFL[illegible] which are les[illegible] f[illegible]ent than LEDs.

[illegible]st manufacturers now offer LED edge-lit LCDs—typically the most energy [illegible]ficient combination of backlighting and panel technology available. At the other end o[illegible]e spectrum, plasma TVs are typically the least-efficient choice. But significant imp[illegible]ements have been made in the last five years, and Energy Star models are available.

Remember, too, that smaller televisions are likely to be more efficient than bigger ones. The American Council for an Energy-Efficient Economy does not recommend purchasing televisions larger than 40 inches.

Other advanced power management features include automatic brightness control, occupancy sensors, and proximity sensors or timer functions to control the energy use of TVs that are on but not being actively viewed. All of these features will save you energy—and money.

Also think about your television's accessories, such as the DVD player and home audio system. Energy Star-certified DVD players use as little as one quarter of the energy of standard models, and home audio systems use 6 percent less than conventional systems. If your TV and accessories all have the Energy Star label, you could save nearly $200 on your average annual energy bill.

Efficiency of Different Types of Televisions

LCD TVs
One of the most efficient TVs to have in the home depending upon the size. Look for an LED edge-lit LCD, typically the most energy efficient combination of backlighting and panel technology.

Plasma TVs
Early models were energy hogs, but efficiency has improved significantly in the last five years. Always look for the Energy Star label.

ED s
Just entering the market, organic LED televisions (oLED) are expected to have lower energy consumption, improved picture quality, and thinner screens than existing LCD technology.

Health and Safety

A comfortable home is an energy-effi nt home. But comfort and savings aren't the only outcomes of energy upg es. Your health and the health of your family is connected to your home's e gy efficiency. That's because many of the measures discussed in this book can lso improve ur home's indoor environment. A thorough energy upgrade wil ckle m sture problems, indoor pollution, toxic chemicals, and more.

What's Healthy?

here a a few damental components of all healthy homes. You'll know you're on the w to a saf nd healthy h me if it meets the following conditions.

Your ndoor enviro ment should be:

- *Dry*
- *Clean*
- *Well ventilated*
- *Free of combustion by-products*

Your home should be free of:

- *Pests*
- *Toxic chemicals*
- *Lead hazards*

The 7 Keys to a Healthy Home Checklist

Following these seven keys to a healthy home will help you address some common household concerns before they become serious problems—for your health and for your home.

Key #1: Keep Your Home Clean

A clean home reduces dust and other irritants that can trigger allergies and asthma attacks. Common house dust may contain asthma triggers, including dust mites (microscopic bugs that feed on human skin flakes). Dust mites are in every home and can trigger asthma in people who are allergic to them.

Dust and vacuum your home every week. Invest in a vacuum with a HEPA filter, which traps small particles that can trigger allergies or other respiratory problems. Wear a dust mask while cleaning if you have allergies or if you're sensitive to dust.

Key #2: Keep Your Home Free of Contaminants

Contaminants are potentially harmful substances such as lead, asbestos, and carbon monoxide that can enter your home through the water supply, through the air, or even be inside your walls. Contact with contaminants can lead to serious health problems, such as kidney and liver disease, respiratory illness, and even cancer.

In the Air

Radon occurs naturally in the earth and can drift into your home through the basement. Buy a radon detection kit from your local hardware store or online. If you have radon, hire a professional who can install basement vents to remove radon from your house.

Carbon monoxide (CO) is a by-product of burning fuel in a furnace or other heating system. It should be vented to the outside, but if ducts are blocked or damaged, it can build up in your home. Purchase CO detectors, and place them within 15 feet o every sleeping area. If a detector goes off, leave the house immediately and call 911.

Asbestos was commonly used as insulation—especially around pi es—until the 1970s. It can cause lung cancer and respiratory illness. If you find b os, don't disturb it, and call an asbestos removal expert.

In the Water

Most people get their water from a public utility tha purifies efore it re hes your home. Still, it can become contaminated with acteria chemi ls, heavy metals, pesticides, and othe lluta If you're co cer d about y water's content, request a report from our utility. If you have a ate water supply, such as a well, don't use pesticides, an get your water tested by a rofessional every year.

Lead

If your home was built before 1978 it may co in lead paint and/or pipes. Lead exposure can cause learning and beh oblems in children, and neurological and reproductive problems in adults. You can buy a lead test kit at the hardware store, but it's always safest to hire a professional to test for lead.

To minimize your lead exposure:

- *Gently wipe door frames, banisters, stairs, railings, porches, fences, windowsills, and walls with a damp paper towel. Throw out the towel.*
- *If you're renovating, make sure the contractor is certified in lead-safe practices.*
- *Run the cold water for three minutes straight to flush out potential lead buildup.*
- *Don't scrape, sand, or burn any substance you think may contain lead.*

Key #3: Keep Your Home Dry

Water comes into your house thr gh cracks in door and window frames, or through leaks in walls, roofs, sho rheads, clothes washers, and faucets. Too much water in the home causes old and structural damage, and provides optimal conditions for some pests, es cially termi

Mold

Mold is a fun s that can irritate yo lungs you have a sore throat, skin rash, diffi y breath or a bloody nose, yo y be affected by mold.

To reduc moistu and preve mold:

- *Clea he bathroom g y by scrubbing the toilet, tub, sink, and fixtures.*
- *ake sure sinks and ubs are draining and water is not pooling anywhere.*
- *Run an exhaust fan while showering and cooking; make sure fans vent to the outside.*
- *Clean up spills and puddles immediately.*
- *t rid of anything damaged by water or flooding, including drywall and insulation.*

Key #4: Keep Your Home Well Maintained

Regular maintenance of your home's systems (heating and cooling, ventilation, plumbing, waste management) is vital for maintaining a healthy home. Malfunctioning equipment could lead to moisture problems, excessive dust, and contamination. In the case of excessive carbon monoxide, the situation could be deadly.

Your systems don't require constant, daily supervision, but they do need to be checked periodically. Check the flues and vents of your heating system to ensure they're connected correctly—otherwise carbon monoxide could build up inside your home. Once a year, have a professional examine your heating and central air-conditioning system. Minor repairs now could save you lots of money later.

Key #5: Keep Your Home Pest-Free

Pests such as insects and rodents can trigger allergies and asthma, spread disease, bite people, and contaminate food.

Rodents

Mice and rats can carry rat bite fever—a bacterial infection caused by bites—and hantavirus, which is spread through mouse and rat waste and can be inhaled by humans. Signs of rodents in your house include gnawed wood or electrical cords, droppings, nests, and scampering sounds.

To keep rodents out of your house, eliminate all water and food sources, including bird feeders and pet dishes. Rodents seek out hiding places, so remove clutter. Keep all food (pet and human) in airtight plastic, glass, or steel containers. Seal exterior gaps with mortar, and install weather-stripping at the bottom of basement and garage doors.

Insects

The most common insects you'll encounter in your home are cockroaches and fleas and ticks. When faced with an infestation, many people turn to pesticides, but these chemicals pose many health risks. They can cause eye, nose, and throat irritation; skin rashes; stomach cramps and nausea; and damage to the kidneys and central nervous system. Children are especially at risk because they may not know the dangers. Always follow the directions on pesticide labels.

To keep insects away, eliminate their food source by cleaning up food spills immediately and putting away all food. To control fleas, give pets [illegible]mpoo, and wash your bedding and vacuum your floors often. If you must use p[illegible]tic[illegible]s keep them out of reach of children, and don't put traps or poisons where k[illegible] migh[illegible]nd them. If you can't handle an infestation on your own [illegible]ll an exterminato[illegible]

Key #6: Keep Your Home Safe

The home can be a perilous envir[illegible] for two ag[illegible]roup[illegible] childr[illegible]nd older adults. Children aren't always aw[illegible]e of household dange[illegible]d older adults aren't as steady on their feet. For both [illegible] them, falls are the most [illegible]quent cause of injury. To prevent falls, keep your hom[illegible] well lit; ins[illegible]ails an[illegible]rab bars; repair broken steps; use nonskid mats under y[illegible]g ; and rem[illegible]e trip[illegible]g hazards.

Key #7: Keep Your Home Well Ventilat d

Proper ventilation in your home expels dust and harmful odors, such as those from household chemicals and pesticides. Many products also release volatile organic compounds, or VOCs, that can cause respiratory problems. VOCs can be found in carpets, paints, cleaning products, and furnishings. The best way to reduce your exposure is to open the windows and let in some fresh air. If you're installing new carpeting or furniture, air out the rooms with fans before moving back in.

KEY SOURCES AND MORE INFORMATION

For more information about saving energy in your home, check out the following sources:

- *The American Council for an Energy-Efficient Economy's Consumer Guide to Home Energy Savings (www.aceee.org/consumer)*
- *United States Consumer Product Safety Commission (www.cpsc.gov)*
- *The United States Department of Energy Tips (www.energy.gov/energysaver)*
- *Energy Star (www.energystar.gov)*

Additional information about Project Energy Savers can be found at **www.projectenergysavers.com**

Notice: This book is published by Project Energy Savers, LLC. Neither Project Energy Savers nor its authors, nor any person acting on behalf of Project Energy Savers makes any warranty expressed or implied with respect to the use of any information disclosed in this book, assumes any liability with respect to the use of, or for damages resulting from the use of, any information contained in this book. The recommendations, statistics used and information provided are strictly for the purpose of informing the user. The actual savings listed are estimated based on research and other findings. They are meant to be suggestive; actual savings will depend on climate, home size and other factors.